Pro-face
for the best interface

Easy! Smooth!

PL-3000B → PS-4000B

Replacement Guidebook

Third Edition Jan. 2013

Copyright © 2013.1 Digital Electronics Corporation. All Rights Reserved.

Introduction

This document introduces the procedures and notes for replacing the PL-3000B with the PS-4000B.
The recommended substitute model is listed below.

Equipment in use	Recommended substitute model
PL-3000B *1 (2 slots, Core™ Duo model) Model code: APL3000-BA/BD	**PS-4000B** (2 slots, Core™ 2 Duo model) Model code: PFXPB1B2C******N00
PL-3000B *1 (2 slots, Celeron® model) Model code: APL3000-BA/BD	**PS-4000B** (2 slots, Atom™ model) Model code: PFXPB1B2B******N00

*1 Sales terminated as of September 2012

Interpreting the PS-4000 Series Model Code

A portion of the PS-4000 Series model code differs according to the specification. When purchasing the PS-4000 Series, carefully check the model code to order before making your purchase.

* The gray-shaded cells in the table cannot be selected with the models (PS-4000B) introduced in this document.

Digit number		5	7	8	9	10	11	12	13	14	15
Front bezel	None (built-in type)	B									
	Aluminum	P									
	Stainless-steel	T									
	Stainless-steel (Atom Z510)	V									
	Aluminum (Atom Z510)	W									
Display	15-inch (XGA)		7								
	19-inch (SXGA)		8								
	None (built-in type)		B								
Expansion slot *1	0 slot			0							
	1 slot = 1 PCI			1							
	2 slots = 1 PCI + 1 PCI Express (x4)			2							
	5 slots = 2 PCI + 3 PCI Express (x1)			5							
	2 slots = 2 PCI			A							
	5 slots = 4 PCI + 1 PCI Express (x1)			B							
CPU type	Atom™ Z510				A						
	Atom™ N270				B						
	Core™ 2 Duo P8400				C						
Power supply	AC					A					
	DC (with UPS battery unit I/F)					B					
	DC					D					
	DC (with marine specification power supply line noise filter)					F					
	DC (with UPS battery unit I/F and marine specification power supply line noise filter)					G					

Digit number		5	7	8	9	10	11	12	13	14	15
Memory	1 GB						1				
	2 GB						2				
	3 GB (2 GB + 1 GB)						3				
	4 GB (2 GB + 2 GB)						4				
	6 GB (4 GB + 2 GB)						6				
	8 GB (4 GB + 4 GB)						8				
OS	None							0			
	Windows® Embedded Standard 2009 MUI							1			
	Windows® XP Pro Japanese Version							2			
	Windows® XP Pro MUI							3			
	Windows® Embedded Standard 7 MUI (32-bit)							4			
	Windows® 7 Ultimate MUI (32-bit)							5			
	Windows® 7 Ultimate MUI (64-bit)							6			
Storage	None								N		
	CF card (4 GB)								C		
	CF card (8 GB)								D		
	HDD								K		
	SSD								T		
Slide-in slot	None									0	
	DVD multi-drive									1	
	HDD									2	
	SSD									3	
	DVD multi-drive + HDD									4	
	DVD multi-drive + SSD									5	
Options	None										0
	DVI-D port expansion board										2
	COM port expansion board (RS-232C/422/485)										4
	DVI-D port expansion board + COM port expansion board (RS-232C/422/485)										5
	PS-4700 (Z510) Ethernet I/F expansion board										8

*1 The number in parentheses indicates the number of PCI Express lanes.
To conform to the PL-3000B, 2 slots is recommended in this document. However, if you wish to use more or less PCI slots when making the replacement, 1 slot or 5 slots (Core™ 2 Duo model only) can also be selected.

Contents

Introduction 2

Interpreting the PS-4000 Series Model Code 3

Contents 5

Chapter 1. Specification Comparison 7

1.1 PL-3000B (Core™ Duo model) and PS-4000B (Core™ 2 Duo model) specification comparison 7

1.2 PL-3000B (Celeron® model) and PS-4000B (Atom™ model) specification comparison 10

Chapter 2. Hardware Compatibility 13

2.1 Differences in function locations 13

2.2 Main memory 16

2.3 Installation 16

2.4 Intelligent fan control 16

2.5 Battery backup UPS (DC power supply models only) 16

2.6 Serial interfaces 17

2.7 DVI-D interface (optional) 17

2.8 PCI slots 17

2.9 DVD-RW drive 18

2.10 External HDD, SSD, USB devices 18

2.11 Power supply plug 19

2.12 Power consumption 19

Chapter 3. Compatibility with Accessories 20

3.1 Individual accessories 20

3.2 Maintenance accessories 20

Chapter 4. Software Compatibility 21

4.1 Supported operating systems 21

4.2 Supported operating system languages 21

4.3 Supported software 23

4.4 Functions supported by System Monitor 24

Chapter 5. Appendix 25

5.1 FP-3000 Series 25

5.1.1 Connecting to the PS-4000B 25

5.1.2 Remote installation distances and cables 25

5.1.3 Required touch panel driver 26

5.2 Uninterruptible power supply (UPS) 27

5.2.1 Overview 27

5.2.2 Specifications 28

5.2.3 Dimensions 28

5.3 INtime OS 29

5.4 Exclusive BTO (build to order) options 29

Chapter 1. Specification Comparison

1.1 PL-3000B (Core™ Duo model) and PS-4000B (Core™ 2 Duo model) specification comparison

Performance specifications			
		PL-3000B (2 slots, Core™ Duo model)	**PS-4000B (2 slots, Core™ 2 Duo model)**
CPU		Intel® Core™ Duo (2.0 GHz)	**UP!** Core™ 2 Duo P8400 (2.26 GHz)
L2 cache		2 MB	**UP!** 3 MB
Main memory		2 slots (4 GB max) (DDR2 533 MHz)	**UP!** 2 slots (8 GB max) (DDR3 1,066MHz) (Not user upgradeable) →See 2.2
Chipset		Intel® 945GME + ICH7M	GM45
Graphics controller		Onboard Intel® 945GME	Intel® Graphics Media Accelerator (GMA) 4500MHD
Video memory		64 MB max (Allocated from main memory)	**UP!** 384 MB (Allocated from main memory)
Video output	**Analog**	VGA (640 x 480 pixels) to UXGA (1,600 x 1,200 pixels)	**UP!** QXGA (2,048 x 1,536 pixels) or lower
	Digital		**UP!** FHD (1,920 x 1,080 pixels) or lower

General specifications			
		PL-3000B (2 slots, Core™ Duo model)	**PS-4000B (2 slots, Core™ 2 Duo model)**
External dimensions		W125 x H243 x D289 mm [W4.94 x H9.57 x D11.38 in.]	W136 x H270 x D251 mm [W5.35 x H10.62 x D9.88 in.] →See 2.3
Weight		Approx. 6.0 kg (13.2 lbs)	
Cooling method		Forced air cooling by fan	**UP!** Forced air cooling by fan (Intelligent fan control) →See 2.4
Power supply →See 2.11	**AC power supply**	100 to 240 V	-
	DC power supply	24 V	
Power consumption	**AC power supply**	120 VA or lower	-
	DC power supply	120 W or lower	**UP!** 90 W or lower →See 2.12
Battery backup UPS		-	**NEW!** Optional (DC power supply only) →See 2.5

Interface specifications			
		PL-3000B (2 slots, Core™ Duo model)	**PS-4000B (2 slots, Core™ 2 Duo model)**
Serial (9-pin D-sub plug)		RS-232C x 2	
		RS-232C/422/485 x 1	RS-232C/422/485 (optional) x 1 →See 2.6
		RS-232C (RI/+5V switchable) x 1	-
RAS		9-pin D-sub socket	-
Disk	**SATA**	2.5-inch HDD/SSD x 2 (Rev. 1.0a)	**NEW!** Slide-in disk: (HDD/SSD) x 1 Slide-in slot: (HDD/SSD/DVD-RW) x 1 →See 2.9
	IDE	CF card (Type-I/II, 2 GB) x 1	**UP!** CF card (Type-I, 4 GB/8 GB) x 1
		DVD-ROM/DVD multi-drive (optional)	- →See 2.9
USB		USB x 4 (USB 2.0 compatible, Type-A)	**UP!** USB x 5 (USB 2.0 compatible, Type-A)
Ethernet	**LAN1**	10BASE-T/100BASE-TX/1000BASE-T auto switching	
	LAN2	10BASE-T/100BASE-TX auto switching	**UP!** 10BASE-T/100BASE-TX/ 1000BASE-T auto switching
Sound		Line output	**UP!** Line input/line output/mic input
DVI		DVI-I x 1	
		-	**NEW!** DVI-D x 1 (Built-in option)→See 2.7
PCI		PCI 2 slots (Rev. 2.3)	PCI 2 slots (Rev. 2.2)→See 2.8

1.2 PL-3000B (Celeron® model) and PS-4000B (Atom™ model) specification comparison

Performance specifications			
		PL-3000B (2 slots, Celeron® model)	**PS-4000B (2 slots, Atom™ model)**
CPU		Intel® Celeron® M 440 (1.86 GHz)	**UP!** Atom™ N270 (1.6 GHz)
L2 cache		1 MB	512 KB
Main memory		2 slots (4 GB max) (DDR2 533 MHz)	2 slots (3 GB max) (DDR2 533MHz) (Not user upgradeable) →See 2.2
Chipset		Intel® 945GME + ICH7M	945GME
Graphics controller		Onboard Intel® 945GME	Intel® Graphics Media Accelerator 950
Video memory		64 MB max (Allocated from main memory)	**UP!** 224 MB (Allocated from main memory)
Video output	**Analog**	VGA (640 x 480 pixels) to UXGA (1,600 x 1,200 pixels)	**UP!** QXGA (2,048 x 1,536 pixels) or lower
	Digital		**UP!** FHD (1,920 x 1,080 pixels) or lower

General specifications			
		PL-3000B (2 slots, Celeron® model)	**PS-4000B (2 slots, Atom™ model)**
External dimensions		W125 x H243 x D289 mm [W4.94 x H9.57 x D11.38 in.]	W121 x H270 x D251 mm [W4.76 x H10.62 x D9.88 in.] →See 2.3
Weight		Approx. 6.0 kg (13.2 lbs)	**UP!** Approx. 5.0 kg (11.0 lbs)
Cooling method		Forced air cooling by fan	**UP!** Natural cooling (fanless)
Power supply →See 2.11	**AC power supply**	100 to 240 V	-
	DC power supply	24 V	
Power consumption	**AC power supply**	120 VA or lower	-
	DC power supply	120 W or lower	**UP!** 60 W or lower →See 2.12
Battery backup UPS		-	**NEW!** Optional (DC power supply only) →See 2.5

Interface specifications			
		PL-3000B (2 slots, Celeron® model)	**PS-4000B (2 slots, Atom™ model)**
Serial (9-pin D-sub plug)		RS-232C x 2	
		RS-232C/422/485 x 1	RS-232C/422/485 (optional) x 1 →See 2.6
		RS-232C (RI/+5V switchable) x 1	-
RAS		9-pin D-sub socket	-
Disk	**SATA**	2.5-inch HDD/SSD x 2 (Rev. 1.0a)	**NEW!** Slide-in disk: (HDD/SSD) x 1 Slide-in slot: (HDD/SSD/DVD-RW) x 1 →See 2.9
	IDE	CF card (Type-I/II, 2 GB) x 1	**UP!** CF card (Type-I, 4 GB/8 GB) x 1
		DVD-ROM/DVD multi-drive (optional)	- →See 2.9
USB		USB x 4 (USB 2.0 compatible, Type-A)	**UP!** USB x 5 (USB 2.0 compatible, Type-A)
Ethernet	**LAN1**	10BASE-T/100BASE-TX/1000BASE-T auto switching	
	LAN2	10BASE-T/100BASE-TX auto switching	**UP!** 10BASE-T/100BASE-TX/ 1000BASE-T auto switching
Sound		Line output	**UP!** Line input/line output/mic input
DVI		DVI-I x 1	
		-	**NEW!** DVI-D x 1 (Built-in option)→See 2.7
PCI		PCI 2 slots (Rev. 2.3)	PCI 2 slots (Rev. 2.2)→See 2.8

Chapter 2. Hardware Compatibility

2.1 Differences in function locations

The locations of the various functions differ on the PL-3000B and the PS-4000B as shown below.

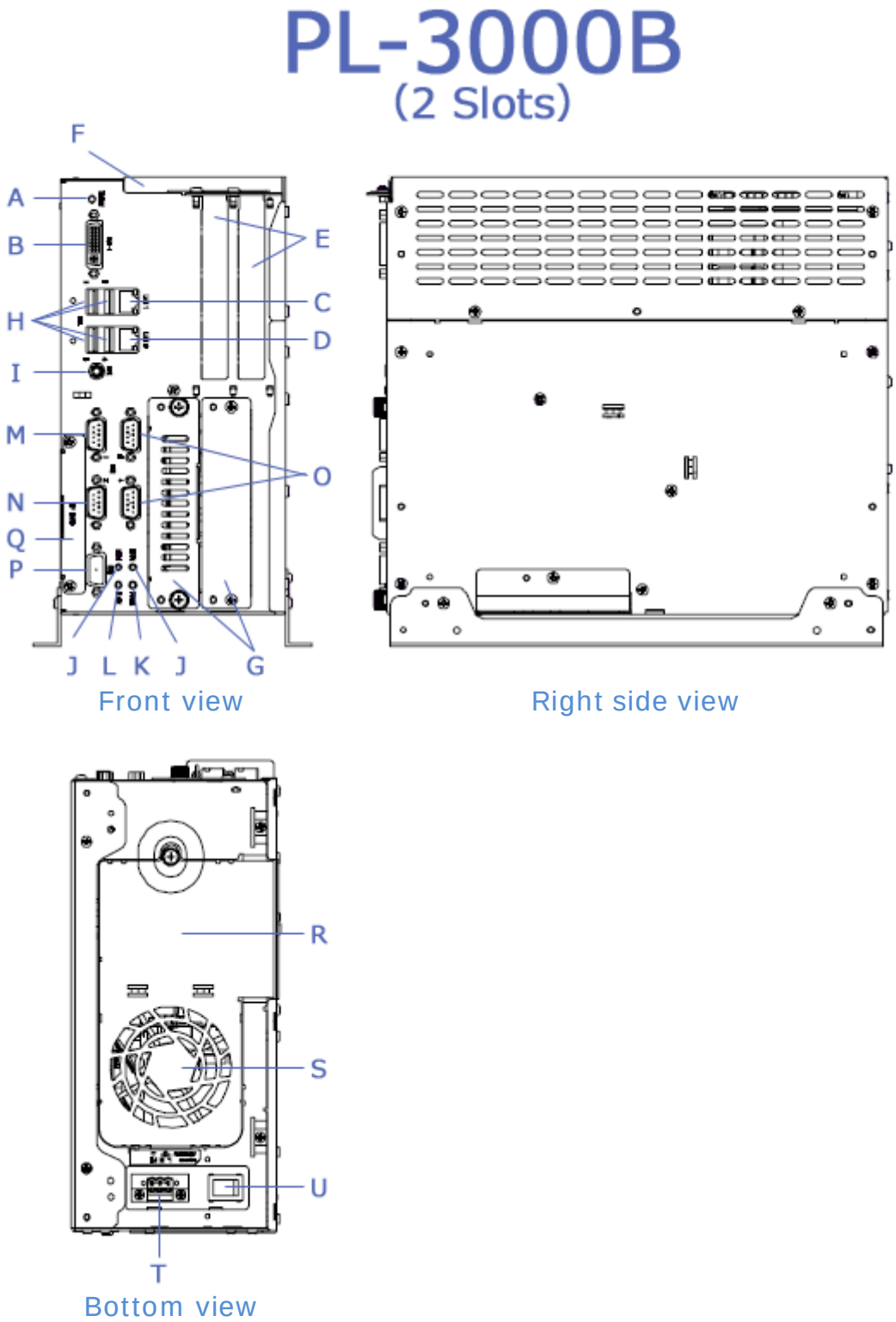

PS-4000B
(2 Slots)

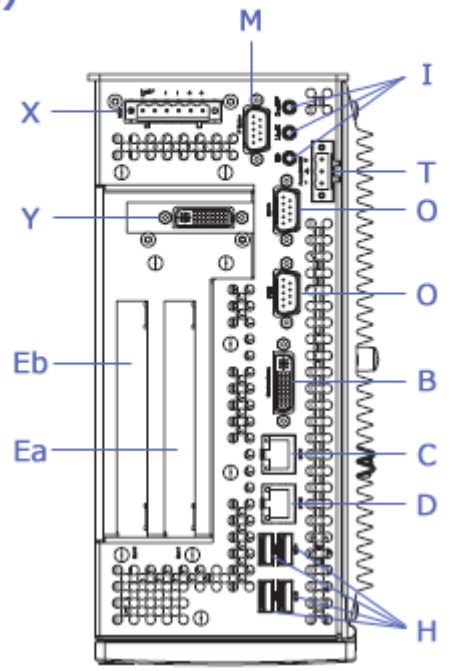

Top view

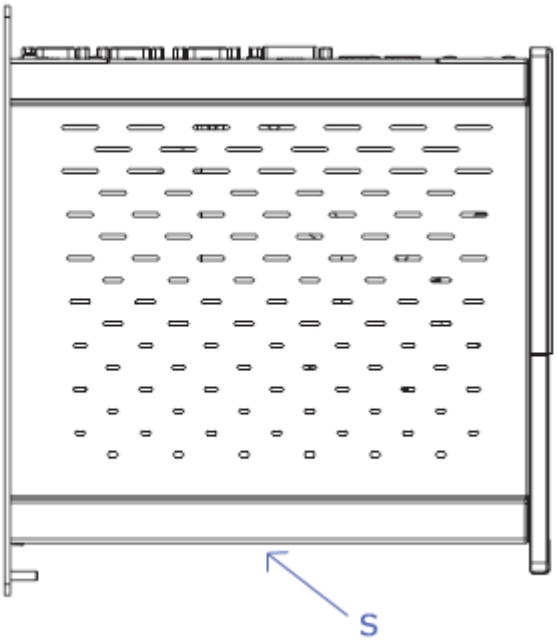

Left side view

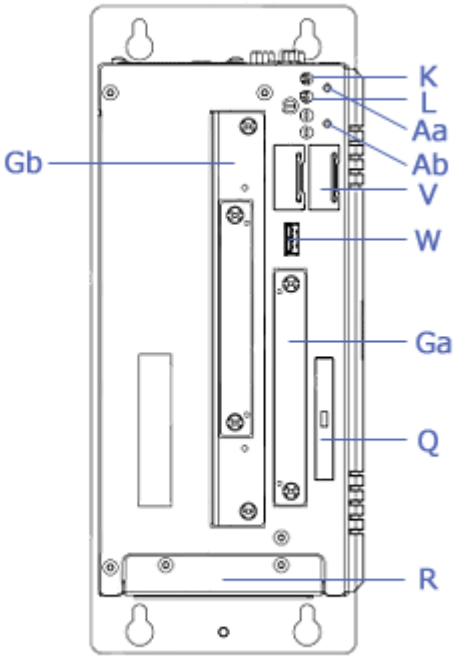

Front view

<table>
<tr><th></th><th>PL-3000B</th><th colspan="4">PS-4000B</th></tr>
<tr><td>A</td><td>Hardware reset switch</td><td>Aa</td><td>Power supply button</td><td>Ab</td><td>Reset button</td></tr>
<tr><td>B</td><td colspan="5">DVI-I interface</td></tr>
<tr><td>C</td><td colspan="5">Ethernet interface (LAN1)</td></tr>
<tr><td>D</td><td colspan="5">Ethernet interface (LAN2)</td></tr>
<tr><td rowspan="2">E</td><td rowspan="2">Expansion slot (PCI) x 2</td><td>Ea</td><td colspan="3">Expansion slot PCI</td></tr>
<tr><td>Eb</td><td colspan="3">Expansion slot (PCI Express x 4)</td></tr>
<tr><td>F</td><td>Expansion slot cover</td><td colspan="4">-</td></tr>
<tr><td rowspan="2">G</td><td rowspan="2">HDD slot</td><td>Ga</td><td colspan="3">Slide-in disk (HDD/SSD)</td></tr>
<tr><td>Gb</td><td colspan="3">Slide-in slot (HDD/SSD/DVD-RW)</td></tr>
<tr><td>H</td><td colspan="5">USB interface x 4</td></tr>
<tr><td>I</td><td>Line output</td><td colspan="4">Mic input/line input/line output</td></tr>
<tr><td>J</td><td>HDD status lamp</td><td colspan="4">-</td></tr>
<tr><td>K</td><td>Power supply LED/RAS status lamp</td><td colspan="4">Power supply LED status lamp</td></tr>
<tr><td>L</td><td colspan="5">Disk access lamp</td></tr>
<tr><td>M</td><td>Serial I/F (RS-232C/422/485)</td><td colspan="4">Serial I/F (RS-232C/422/485, optional)</td></tr>
<tr><td>N</td><td>Serial I/F (RS-232C, RI/5V switchable)</td><td colspan="4">-</td></tr>
<tr><td>O</td><td colspan="5">Serial I/F (RS-232C) x 2</td></tr>
<tr><td>P</td><td>RAS interface</td><td colspan="4">-</td></tr>
<tr><td>Q</td><td colspan="5">CF slot</td></tr>
<tr><td>R</td><td colspan="5">Fan cover</td></tr>
<tr><td>S</td><td>System fan</td><td colspan="4">System fan (Core™ 2 Duo model only)</td></tr>
<tr><td>T</td><td colspan="5">Power supply connector</td></tr>
<tr><td>U</td><td>Power supply switch</td><td colspan="4">-</td></tr>
<tr><td>V</td><td>Equipped internally</td><td colspan="4">Backup lithium battery</td></tr>
<tr><td>W</td><td>-</td><td colspan="4">USB interface</td></tr>
<tr><td>X</td><td>-</td><td colspan="4">UPS interface board</td></tr>
<tr><td>Y</td><td>-</td><td colspan="4">DVI-D interface (optional)</td></tr>
</table>

2.2 Main memory

The memory in the PS-4000B cannot be upgraded by the customer after it is purchased. The amount of memory selected in the built-in shipping options is the maximum amount of memory. For example, models with a maximum amount of memory of 8 GB in their specification cannot be upgraded with additional memory if they have been purchased with 4 GB specified in the built-in shipping options. Please use caution when ordering. →5.4 Exclusive BTO (build to order) options

2.3 Installation

The external dimensions of the PS-4000B differ from those of the PL-3000B. In order to safely install the product taking into consideration sufficient air circulation, a space with the following values or larger is required. The fanless model (Atom™ N270 model) cannot be installed horizontally.

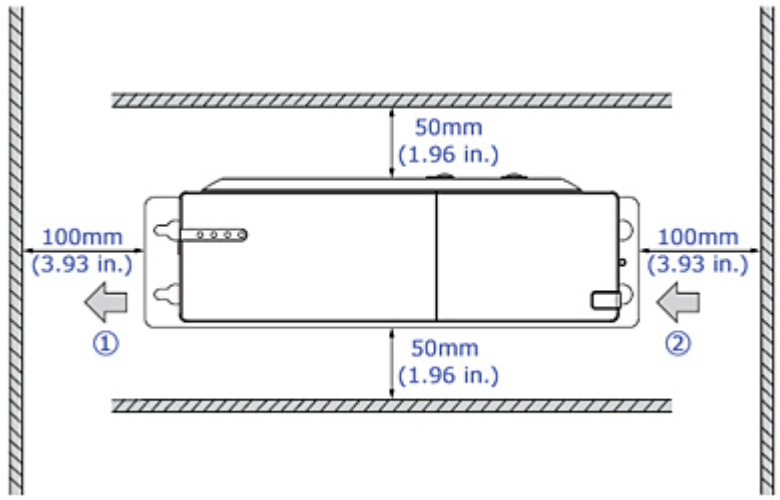

* This space is valid for both vertical and horizontal installations.

1. Intake, 2. exhaust

2.4 Intelligent fan control

The fan speed for PS-4000B models equipped with a fan is controlled according to the internal temperature. The fan does not operate until the internal temperature reaches a specific temperature.

2.5 Battery backup UPS (DC power supply models only)

By equipping the PS-4000B with a UPS battery unit, power can continue to be supplied even when there is a loss of power due to a power failure and running programs can be correctly terminated by the UPS software.
To connect a UPS battery unit, specify "B" or "G" for the 10th digit of the model code in the built-in shipping options. Please note that the option cannot be installed after purchase. →5.4 Exclusive BTO (build to order) options

2.6 Serial interfaces

One additional serial interface port can be added to the PS-4000B that corresponds to the communication method (RS-232/422/485). To add an additional port, specify "4" for the 15th digit of the model code in the built-in shipping options. An additional port cannot be added after purchase. Please use caution when ordering. →5.4 Exclusive BTO (build to order) options
To perform RS-422/485 communication with the additional serial interface, software is required to switch the RTS lines each time the driver sends or receives data. The RTS lines are not switched automatically.
The PS-4000B also uses COM3 internally as the touch panel interface. When adding additional COM ports with expansion boards or USB-SIO, do not use COM3.

2.7 DVI-D interface (optional)

The PS-4000B can output images to a second monitor by installing the DVI-D port expansion board. To connect a DVI-D port expansion board, specify "2" or "5" for the 15th digit of the model code in the built-in shipping options. Please note that the option cannot be installed after purchase. →5.4 Exclusive BTO (build to order) options
Connect the expansion DVI-D interface to a single-link monitor. If you connect the interface to a dual-link monitor, there is a risk that images may not be displayed and a risk of damage to the monitor.

2.8 PCI slots

Certain PS-4000B models are equipped with PCI Express. If you wish to replace a PCI 1 slot/PCI Express (x4)* 1 slot model, specify "2" for the 8th digit of the model code in the built-in shipping options. If you wish to replace a PCI 2 slots/PCI Express (x1)* 3 slots model, specify "5" for the 8th digit of the model code in the built-in shipping options. If you wish to replace a PCI 4 slots/PCI Express (x1)* 1 slot model, specify "B" for the 8th digit of the model code in the built-in shipping options. * The number in parentheses indicates the number of PCI Express lanes.

2.9 DVD-RW drive

The DVD-RW drive is connected to the slide-in slot. When an HDD or SSD is connected to the slide-in slot, the DVD-RW drive cannot be used. Separately prepare a commercially available DVD drive that can connect via USB.

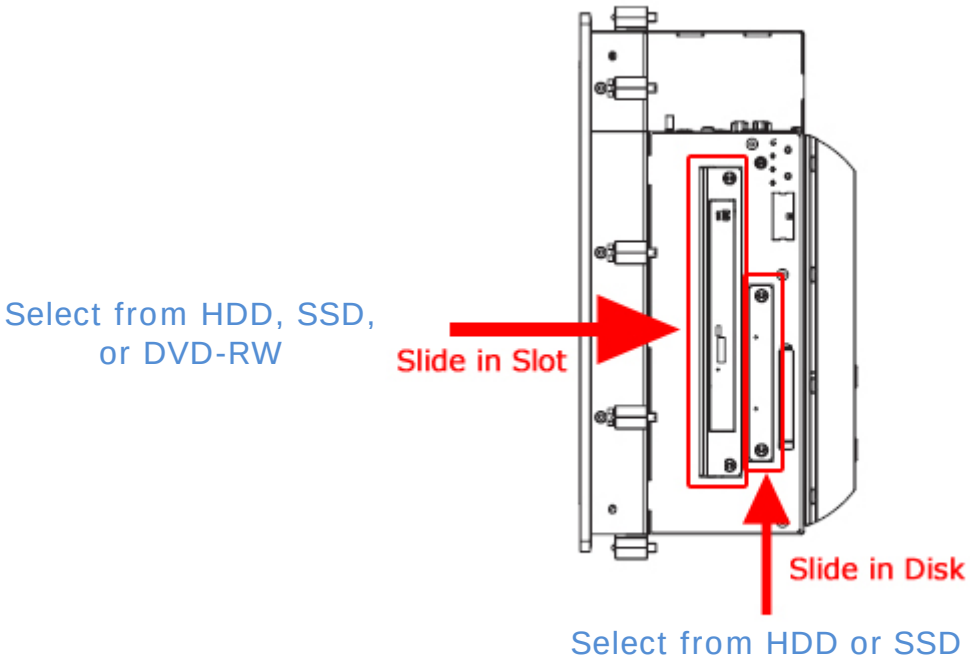

2.10 External HDD, SSD, USB devices

When an external HDD, SSD, or USB device is connected to a PS-4000B pre-installed with Microsoft Windows Embedded Standard, the system will no longer start. In this situation, the system can be made to start with the device connected to it by configuring the setting below in the BIOS boot menu. The setting depends on the CPU as shown below.

CPU	BIOS setting
Core™ 2 Duo	Change [1st Boot Device] setting to "Fourth Master"
Atom™	Change [1st Boot Device] setting to "Secondary Master"

*The notes above are included with models pre-installed with Microsoft Windows® Embedded Standard.

2.11 Power supply plug

PL-3000B had both AC and DC power supply models, but the PS-4000B has only DC power supply models. Caution: The power line terminal locations for the power supply plug are different.

	PL-3000B	PS-4000B (DC power supply only)
AC power supply	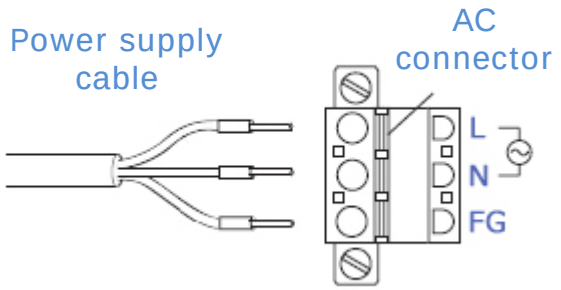	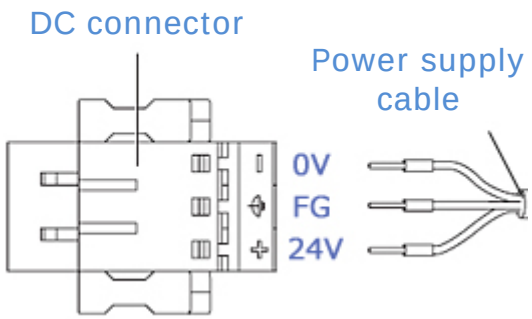
DC power supply	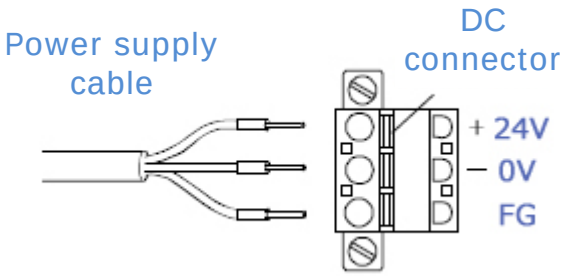	

2.12 Power consumption

The power consumption does not include the value of power supplied to devices in the provided expansion slots and to USB devices. The maximum power consumption of the entire product including the value of supplied power is 130 W.

Chapter 3. Compatibility with Accessories

3.1 Individual accessories

Individual accessories for the PL-3000B and their compatibility are listed below.

Product name		Model code *	PL-3000B	PS-4000B
DIM module DDR2	512 MB	CA7-DDR2-512MB	✓	x
	1 GB	CA7-DDR2-1GB	✓	x
	2 GB	CA7-DDR2-2GB	✓	x
HDD unit	250 GB	APL3000-HD250	✓	x
SSD unit	16 GB	APL3000-SD16	✓	x
CF card	128 MB	CA3-CFCALL/128MB-01	✓	x
	256 MB	CA3-CFCALL/256MB-01	✓	x
	512 MB	CA3-CFCALL/512MB-01	✓	x
	1 GB	CA6-CFCALL/1GB-01	✓	x
	2 GB	CA8-CFCALL/2GB-01	✓	x
Industrial hub		SPIDER8TX-PRO	✓	✓
Software mirroring utility		APL-SM3000	✓	x
USB cable	5 m	FP-US00	✓	✓
RS-232C cable	5 m	FP61V-IS00-O	✓	✓
Analog RGB cable	4.5 m	FP-CV02-45	✓	✓
DVI-RGB conversion cable	5 m	CA7-CBLCVRGB-01	✓	✓
DVI-RGB splitter cable	15 cm	CA7-CBLCVDVI-D/RGB-01	✓	✓
AC power supply connector (right angle) (5 pcs.)		CA7-ACCNLR-01	✓	x

* Please check the model code/global code table at http://www.proface.co.jp/product/globalcode.html.

3.2 Maintenance accessories

Maintenance accessories for the PL-3000B and their compatibility are listed below.

Product name	Model code *	PL-3000B	PS-4000B
Mounting hardware	APL-ATFB-01	✓	x
AC power supply connector (straight) (5 pcs.)	CA7-ACCNL-01	✓	x
DC power supply connector (straight) (5 pcs.)	CA7-DCCNL-01	✓	x
AC power supply connector (right angle) (5 pcs.)	CA7-ACCNLR-01	✓	x
DC power supply connector (right angle) (5 pcs.)	CA5-DCCNL-01	✓	x

* Please check the model code/global code table at http://www.proface.co.jp/product/globalcode.html.

Chapter 4. Software Compatibility

4.1 Supported operating systems

The supported operating systems for the PL-3000B and the PS-4000B are listed below.
* See the bottom of this page for the operating system abbreviations used in this table.

OS	PL-3000B		PS-4000B	
	Core™ Duo	Celeron® M	Core™ 2 Duo	Atom™
Win2000	✓	✓	x	x
Win2000 ML	x	✓	x	x
WinXP	✓	✓	✓	✓
WinXP ML	✓	✓	✓	✓
XPE ML	✓	✓	x	x
WES2009	x	x	✓	✓
WES7	x	x	✓	x
Win7	x	x	✓	x

4.2 Supported operating system languages

The supported operating system languages differ between the PS-4000B and the PL-3000B. They are listed in the table on the following page.
* The abbreviations and symbols in the table have the following meanings.

✓	Supported.
△	The language can be used by installing the language pack provided with "Otasuke Pro!". Download from the URL below. http://www.proface.co.jp/otasuke/download/ps/ps4000/wes7lang.htm
x	Not supported.
Win2000	Windows® 2000 Japanese
Win2000 ML	Windows® 2000 Multi-Language
WinXP	Windows® XP Professional Japanese
WinXP ML	Windows® XP Professional Multi-Language
XPE ML	Windows® XP Embedded Multi-Language
WES2009	Windows® Embedded Standard 2009
WES7	Windows® Embedded Standard 7
Win7	Windows® 7 Ultimate
3000 B	PL-3000B
4000 B	PS-4000B

Language	WinXP		WinXP ML		XPE ML	WES 2009	WES7	Win7
	3000B	4000B	3000B	4000B	3000B	4000B	4000B	4000B
Arabic	x	x	x	✓	△	✓	△	✓
Bulgarian	x	x	✓	✓	x	x	△	✓
Chinese (Simplified)	x	x	✓	✓	△	✓	△	✓
Chinese (Traditional)	x	x	✓	✓	△	✓	△	✓
Croatian	x	x	✓	✓	x	x	△	✓
Czech	x	x	✓	✓	△	✓	△	✓
Danish	x	x	✓	✓	△	✓	△	✓
Dutch	x	x	✓	✓	△	✓	△	✓
English	x	x	✓	✓	✓	✓	✓	✓
Estonian	x	x	✓	✓	x	x	△	✓
Finnish	x	x	✓	✓	△	✓	△	✓
French	x	x	✓	✓	✓	✓	✓	✓
German	x	x	✓	✓	✓	✓	✓	✓
Greek	x	x	✓	✓	△	✓	△	✓
Hebrew	x	x	x	✓	△	✓	△	✓
Hungarian	x	x	✓	✓	△	✓	△	✓
Italian	x	x	✓	✓	✓	✓	✓	✓
Japanese	✓	✓	x	✓	✓	✓	✓	✓
Korean	x	x	x	✓	△	✓	△	✓
Latvian	x	x	✓	✓	x	x	△	x
Lithuanian	x	x	✓	✓	x	x	△	✓
Norwegian	x	x	x	✓	△	✓	△	✓
Polish	x	x	✓	✓	△	✓	△	✓
Portuguese	x	x	✓	✓	△	✓	△	✓
Portuguese (Brazil)	x	x	✓	✓	△	✓	△	✓
Romanian	x	x	✓	✓	x	x	△	✓
Russian	x	x	✓	✓	△	✓	△	✓
Serbian Latin	x	x	x	x	x	x	△	✓
Slovak	x	x	✓	✓	x	x	△	✓
Slovenian	x	x	✓	✓	x	x	△	✓
Spanish	x	x	✓	✓	✓	✓	✓	✓
Swedish	x	x	✓	✓	△	✓	△	✓
Thai	x	x	✓	✓	x	x	△	✓
Turkish	x	x	✓	✓	△	✓	△	✓
Ukrainian	x	x	x	x	x	x	△	✓

4.3 Supported software

The software that the PS-4000B supports is listed below.

Software	Software mirroring (APL-SM3000)	x
	WinGP *1	✓
Utilities	System Monitor	✓
	Touch panel driver *2	✓
	Keyboard emulator *3	✓
	Remote shutdown	x
	EWF Setting Tool *4	✓
	XP Embedded CF card backup/recovery tool *5	x
	Lang Shell *6	x
	Language selection Shell update *7	✓
API-DLL *8	System Monitor	x
	EWF	x

*1 When WinGP was installed on the PL-3000B and RS-422/485 communication was being performed, the PL-3000B cannot be replaced with the PS-4000B as is.
→See 2.6
*2 The PL-3000B driver is DMC's UPDD, but the PS-4000B uses software called Touch Screen.
Please be aware that right click operations change to touch and hold.
The touch sound is also issued when the finger is lifted from the screen, not when the screen is pressed.
*3 Use the user assistance screen keyboard standard in Windows® 7 Ultimate and Windows® Embedded Standard 7.
*4 The PL-3000B was RAM mode, but the PS-4000B changes to RAM REG.
*5 The PL-3000B had a dedicated tool, but the PS-4000B does not support it.
When backup/recovery is required, prepare a normal tool (commercially available product, free software).
*6 Can be configured with the Windows® Embedded Standard 7 standard function.
*7 Only supported by Windows® Embedded Standard 7.
*8 API-DLL is not supported.

4.4 Functions supported by System Monitor

The System Monitor functions that the PS-4000B supports are listed below.

Monitor item	Error Action	
Voltage	DOUT	x
	LED	x
	Buzzer	x
	Popup Message	x
	Shutdown	x
Fan *1	DOUT	x
	LED	✓
	Buzzer	✓
	Popup Message	✓
	Shutdown	✓
Temperature	DOUT	x
	LED	✓
	Buzzer	✓
	Popup Message	✓
	Shutdown	✓
Backlight	DOUT	x
	LED	x
	Buzzer	x
	Popup Message	x
Watchdog Timer	DOUT	x
	LED	x
	Buzzer	x
	Popup Message	x
	Shutdown	x
	Hardware Reset	x

*1 Core™ 2 Duo models only

Monitor item	Error Action	
SMART	DOUT	x
	LED	✓
	Buzzer	✓
	Popup Message	✓
DIN	DOUT	x
	LED	x
	Buzzer	x
	Popup Message	x
	Shutdown	x
Remote Reset	-	x
Remote RAS	-	x
Battery	DOUT	x
	LED	x
	Buzzer	✓
	Popup Message	✓
	Shutdown	✓
	Shutdown Time	0-60 Sec

Chapter 5. Appendix

5.1 FP-3000 Series

5.1.1 Connecting to the PS-4000B

The PS-4000B can connect to the FP-3000 Series by DVI* or analog RGB.
If the DVI-D option board is built-in when shipped, the computer can simultaneously output images to two FP-3000 Series units. →See 2.7

* Its Rev.2 or later of FP3000 Series supports DVI

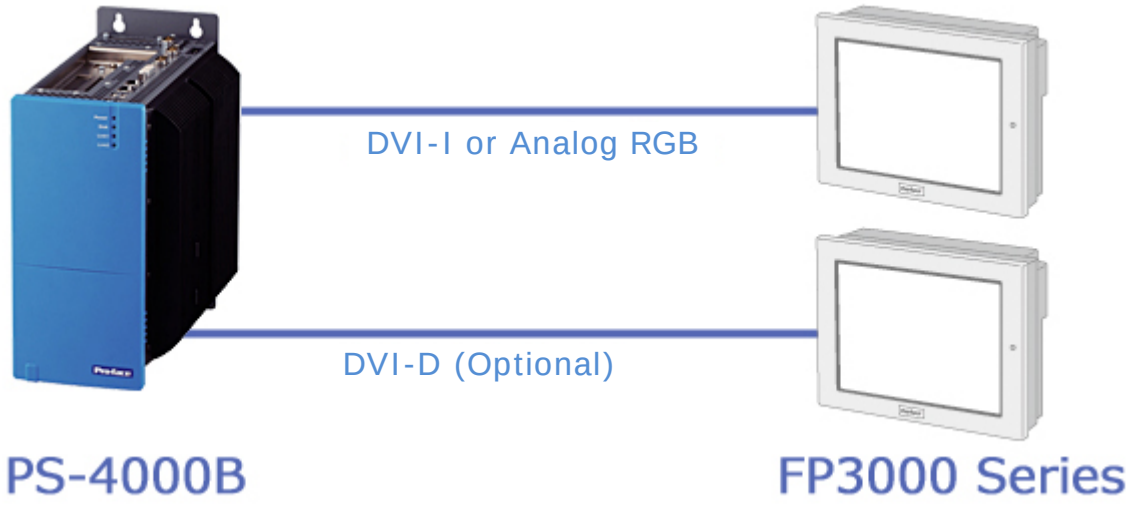

5.1.2 Remote installation distances and cables

The distances the FP-3000 Series can be remotely installed and the cables that support those distances are listed below.

Cable		PL-3000B	PS-4000B
5 m	Analog RGB	CA7-CBLCVRGB-01 or CA7-CBLCDVI-D/RGB-01 + FP-CV02-45	
	DVI	FP-DV01-50 *1	
	USB	FP61V-IS00-O or FP-US00	
10 m	Analog RGB	-	
	DVI	FP-DV01-100 *2	PFXZPBCBDV101 *3
	USB	Commercially available product *4	

*1 To connect the FP-3000 Series to the PS-4000 Series, only revision "2" FPs with the symbol can be used.
*2 FP-3000 Series models that can be connected are only those that support SXGA or XGA resolutions.
*3 The maximum cable length for DVI standard is 5m. Because the 10m cable is non-standard, the exact performances is not guaranteed. According to environment or equipment configuration, video images may not be displayed properly, so be sure to check performances every time environment or equipment configuration is changed. A 5m cable is recommended when using in SXGA resolution or higher.
*4 Carefully check the operating environment yourself before selecting the cable.

5.1.3 Required touch panel driver

The touch panel driver that must be installed on the PS-4000B is listed below.

	FP-3710T	FP-3710K/FP-3900T	FP-3600T *1/FP-3650T
WinXP JP, WinXP ML, WES2009	UPDD		
Win7, WES7	TSC-DD		

*1 Win7 and WES7 do not officially support a SVGA (800 x 600 pixels) resolution, but we have verified that the screen is displayed without problems.

WinXP JP	Windows® XP Professional Japanese
WinXP ML	Windows® XP Professional Multi-Language
WES2009	Windows® Embedded Standard 2009
WES7	Windows® Embedded Standard 7
Win7	Windows® 7 Ultimate

5.2 Uninterruptible power supply (UPS)

5.2.1 Overview

The uninterruptible power supply (UPS) option can only be used with DC power supply types. The diagram below shows the PS-4000 Series with an attached UPS.

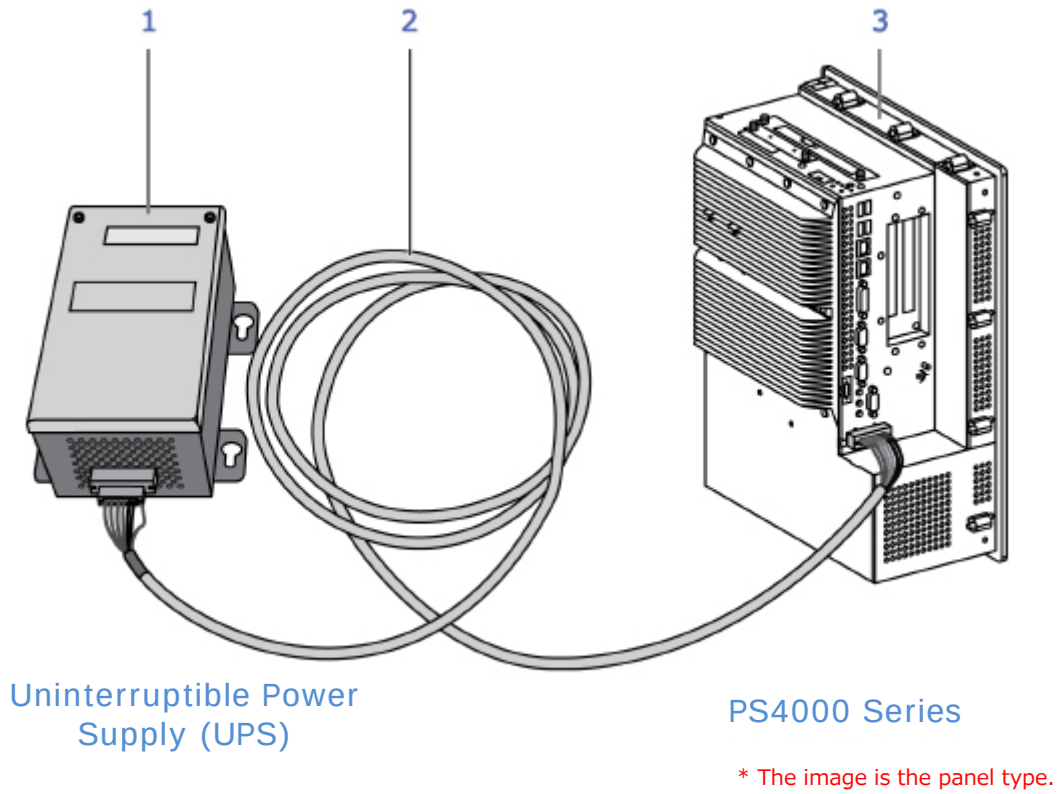

* The image is the panel type.

1: UPS battery unit (model code: PFXZPSEUUPB1)
2: UPS connection cable 3 m (model code: PFXZPSCBUP3)
3: PS-4000 Series equipped with the UPS interface board (installed when shipped*)

Primary features of the UPS option:

- Rechargeable battery that is maintenance free and lasts a long time
- Communication over the built-in interface
- Temperature sensor
- Over discharge protection

* You must specify "B" for the 10th digit of the model code in the built-in shipping options. Please note that the option cannot be installed after purchase.

5.2.2 Specifications

Main power supply/battery powered switching threshold	15 / 13 V
Power failure backup time	20 minutes maximum (at 150 W load)
Charging current	0.5 A maximum
Over discharge protection	10 V on battery unit
Short circuit protection	None
Power consumption	7.5 W maximum
Status indicator	Displayed in System Monitor utility
Configuration	Configured with System Monitor utility

5.2.3 Dimensions

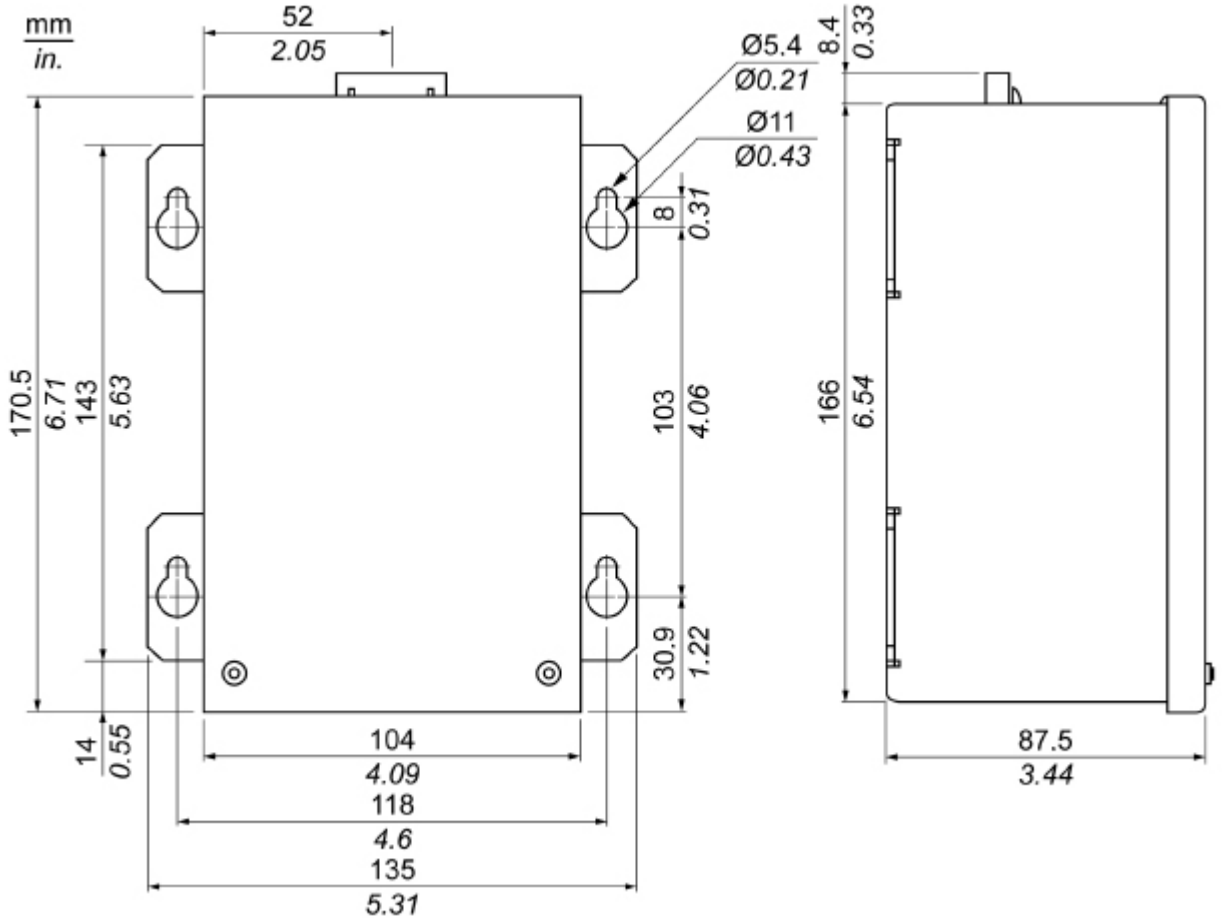

5.3 INtime OS

The PS-4000B supports the INtime OS.
For details, contact TenAsys Corporation.
http://www.mnc.co.jp/INtime/
http://www.tenasys.com/products/intime.php

5.4 Exclusive BTO (build to order) options

The products introduced below are optional products that can be built-in to the PS-4000B when purchased. The products below can be built-in by specifying the order model code as shown in red. Please note that the options cannot be installed after purchase.

Product name		Order model code
Main memory	1 GB	PFXPB1B2**1****N00
	2 GB	PFXPB1B2**2****N00
	3 GB (2 GB + 1 GB)	PFXPB1B2**3****N00
	4 GB (2 GB + 2 GB)	PFXPB1B2**4****N00
	6 GB (4 GB + 2 GB)	PFXPB1B2**6****N00
	8 GB (4 GB + 4 GB)	PFXPB1B2**8****N00
UPS battery unit I/F unit (DC power supply model)		PFXPB1B2*B*****N00
UPS battery unit I/F unit (DC power supply model, with marine specification power supply line noise filter)		PFXPB1B2*G*****N00
DVI-D port expansion board		PFXPB1B2******2N00
COM port expansion board (RS-232C/422/485)		PFXPB1B2******4N00
DVI-D port expansion board + COM port expansion board (RS-232C/422/485)		PFXPB1B2******5N00