Digital
Human Machine Interface

Pro-face®

Flex Network
Analog Unit
User Manual

Digital
Digital Electronics Corporation

Preface

Thank you for purchasing Digital Electronics Corporation's Flex Network analog (AD Conversion / DA Conversion) units, hereafter referred to as the "Unit".

The unit is designed to be used with Pro-face's Graphical Logic Controller (GLC) Series, LT Series, and GP3000 Series FLEX NETWORK board type (hereafter referred to as "GLC") as a remote I/O system.

This manual explains the overall features and specifications of the Unit, as well as its installation procedures.

Please be sure to read this manual thoroughly to understand the correct and safe usage of this product and its features.

Flex Network analog (AD Conversion / DA Conversion) units (FN-AD04AH11/ FN-DA04AH11) are not CE marked, UL/c-UL (CSA) listed products.

<Note>

1) It is forbidden to copy the contents of this manual, in whole or in part, except for the user's personal use, without the express permission of the Digital Electronics Corporation of Japan.
2) The information provided in this manual is subject to change without notice.
3) This manual has been written with care and attention to detail; however, should you find any errors or omissions, please contact the Digital Electronics Corporation and inform us of your findings.
4) Please be aware that Digital Electronics Corporation shall not be held liable by the user for any damages, losses, or third party claims arising from the uses of this product.

All Company/Manufacturer names used in this manual are the registered trade-marks of those companies.

© Copyright 2000 Digital Electronics Corporation

FLEX NETWORK® is a registered trademark of Digital Electronics Corporation in Japan and other countries.

Table of Contents

Preface 1
Table of Contents 2
Essential Safety Precautions 4
Documentation Conventions 6
Flex Network Unit Models 6
Compatible GLC Units 7
Driver 7

CHAPTER 1 INTRODUCTION

1.1 System Design 1-1
1.2 Accessories 1-3

CHAPTER 2 SPECIFICATIONS

2.1 General Specifications 2-1
2.1.1 Electrical 2-1
2.1.2 Environmental 2-1
2.1.3 Structural 2-2
2.2 Performance Specifications 2-2
2.2.1 Data Transfer Settings 2-2
2.2.2 Flex Network Analog Unit Input/Ouput 2-3
2.3 Analog Characteristics 2-4
2.4 Analog/Digital Conversion 2-5
2.5 4-Channel Analog Unit Wiring 2-6
2.6 Part Names and Features 2-8
2.6.1 4-Channel Analog Unit Part Names and Features 2-8
2.7 Dimensions 2-14
2.7.1 Analog Unit Dimensions 2-14

CHAPTER 3 INSTALLATION AND WIRING

3.1 Installation 3-1
3.1.1 Installing / Removing the Analog Unit 3-1
3.2 Wiring 3-3
3.2.1 Using the Flex Network Communication Cable 3-3
3.2.2 Power Cord Wiring 3-6
3.2.3 I/O Cable 3-6
3.2.4 Cautions When Wiring Communication Lines 3-7

CHAPTER 4 PROBLEMS AND SOLUTIONS

4.1 Prior to Troubleshooting 4-1
4.2 Error Code Display 4-2
4.3 Troubleshooting for GLC2000/LT Series 4-3
4.3.1 Troubleshooting Checklist for GLC2000/LT Series 4-3
4.3.2 Error Code List for GLC2000/LT Series 4-4
4.4 Troubleshooting for GP3000 Series 4-5
4.4.1 Troubleshooting Checklist for GP3000 Series 4-5
4.4.2 Error Code List for GP3000 Series 4-6

Essential Safety Precautions

This guide contains a variety of safety markings for safe and correct operation of this Unit. Please read this installation guide and any related manuals carefully to fully understand how to correctly use this Unit's functions.

■ Safety Symbols

Please pay attention to these symbols and follow all instructions given.

The safety symbols and their meanings are as follows:

⚠ DANGER	Indicates situations where severe bodily injury, death or major machine damage will definitely occur.
⚠ WARNING	Indicates situations where severe bodily injury, death or major machine damage can possibly occur.
⚠ CAUTION	Indicates situations where slight bodily injury or machine damage can occur.

⚠ DANGERS

- **An emergency stop circuit and an interlock circuit should be constructed outside of this Unit. Constructing these circuits inside a system that uses this Unit may cause a runaway situation, system failure, or an accident due to unit failure.**
- **Systems using this Unit should be designed so that output signals which could cause a serious accident are monitored from outside the Unit.**
- **This Unit is designed to be a general-purpose device for general industries, and is neither designed nor produced to be used with equipment or systems in potentially life-threatening conditions. If you are considering using this Unit for special uses, including nuclear power control devices, electric power devices, aerospace equipment, medical life support equipment, or transportation vehicles, please contact your local Pro-face distributor.**

⚠ WARNINGS

- **Prior to installing, removing, wiring, and conducting maintenance or inspections, be sure to disconnect power to this Unit to prevent an electric shock or fire.**

⚠ WARNINGS

- **Do not disassemble or remodel this Unit, since it may lead to an electric shock or fire.**
- **Do not use this Unit in an environment that contains flammable gases since an explosion may occur.**
- **Do not use this Unit in an environment that is not specified in either the Installation Guide or the User Manual. Otherwise, an electric shock, fire, malfunction or other failure may occur.**
- **Due to the possibility of an electric shock or malfunction, do not touch this Unit's power terminals while it is operating.**

⚠ CAUTIONS

- **Communication cables or I/O signal lines must be wired separately from the main circuit (high-voltage, large-current) line, high-frequency lines such as inverter and power lines. Otherwise, a malfunction may occur due to noise.**
- **This Unit must be installed according to directions given in the Installation Guide and the User manual. Improper installation may cause the Unit to malfunction or fail.**
- **This Unit must be wired according to directions in the Installation Guide and the User Manual. Improper wiring may cause a malfunction, failure or electric shock.**
- **Do not allow foreign substances, including chips, wire pieces, water, or liquids to enter inside this Unit's case. Otherwise, a malfunction, failure, electric shock, or fire may occur.**
- **When disposing of this Unit, it should be processed according to your country's industrial waste disposal laws.**

■ To Prevent Unit Damage

- Avoid storing or operating this Unit in either direct sunlight or excessively dusty or dirty environments.
- Because this Unit is a precision instrument, do not store or use it in locations where strong shocks or excessive vibration may occur.
- Avoid covering this Unit's ventilation holes, or operating it in an environment that may cause it to overheat.
- Avoid operating this Unit in locations where sudden temperature changes can cause condensation to form inside the Unit.
- Do not use paint thinner or organic solvents to clean this Unit.

Documentation Conventions

The list below describes the documentation conventions used in this manual.

Symbol	Meaning
Important	Indicates important information or procedures that must be followed for correct and risk-free software/device operation.
*1	Indicates useful or important supplemental information.
1) , 2)	Indicates steps in a procedure. Be sure to perform these steps in the order given.
Reference	Refers to useful or important supplemental information.
Note:	Provides useful or important supplemental information.
GLC	Generic name for the "GLC Series" of Graphic Logic Controllers made by Pro-face. In this manual, it also indicates "LT Series" and "GP3000 Series FLEX NETWORK board type".

Flex Network Unit Models

Flex Network Units allow the GLC to communicate via a Flex Network system. The different Flex Network Unit model numbers are shown below.

Product Family	Unit Name	Model No.	Nodes Required	Manual
Flex Network	I/O Unit	FN-X16TS41	1	DIO Unit User Manual
		FN-X32TS41	2	
		FN-Y16SK41	1	
		FN-Y16SC41	1	
		FN-XY08TS41	1	
		FN-XY16SK41	1	
		FN-XY16SC41	1	
		FN-XY32SKS41	4	
		FN-Y08RL41	1	
	Analog Unit	FN-AD02AH41	1	2-Cannel Analog Unit User Manual
		FN-DA02AH41	1	
		FN-AD04AH11	4	This Manual
		FN-DA04AH11	4	
	Single-Axis Positioning Unit	FN-PC10SK41	4	Single-Axis Positioning Unit User Manual
		FN-PC10LD41	-	
	High-Speed Counter Unit	FN-HC10SK41	8	High-Speed Counter Unit User Manual

Compatible GLC Units

The following GLC units can be used with the Flex Network units. (GLC, LT , and GP are referred to collectively as the “GLC” in this manual.)

Product Family	Series Name		Unit Name	Model No.
GLC	GLC2000 Series	GLC2300 Series	GLC2300T	GLC2300-TC41-24V
			GLC2300L	GLC2300-LG41-24V
		GLC2400 Series	GLC2400T	GLC2400-TC41-24V
		GLC2500 Series	GLC2500T	GLC2500-TC41-24V
				GLC2500-TC41-200V
		GLC2600 Series	GLC2600T	GLC2600-TC41-24V
				GLC2600-TC41-200V
LT	LT Series		LT TypeB	GLC150-BG41-FLEX-24V
			LT Type B+	GLC150-BG41-XY32KF-24V
			LTC Type B+	GLC150-SC41-XY32KF-24V
			LT Type C	GLC150-BG41-RSFL-24V
GP	GP3000 Series	GP-3300 Series	AGP-3300L	AGP3300-L1-D24-FN1M
			AGP-3300T	AGP3300-T1-D24-FN1M
		GP-3400 Series	AGP-3400T	AGP3400-T1-D24-FN1M
		GP-3500 Series	AGP-3500T	AGP3500-T1-D24-FN1M
				AGP3500-T1-AF-FN1M
		GP-3600 Series	AGP-3600T	AGP3600-T1-D24-FN1M
				AGP3600-T1-AF-FN1M

Driver

The driver for the Flex Network Unit is required in order to use the unit.

For GLC2000 series and LT series,

You can select the Flex Network Driver via GP-PRO/PBIII C-Package (Pro-Control Editor) or LT Editor.

If the selection of the appropriate unit's name does not appear in the [I/O Configuration] - [I/O Unit Settings] area, you will need to update the driver file.

You can download the latest driver from Pro-face's web site.

URL :http://www.pro-face.com/

For GP3000 Series,

You can select the Flex Network Driver via GP-Pro EX as an I/O driver.

Memo

Chapter 1 Introduction

1. System Design
2. Accessories

The Analog/Digital Conversion Unit (FN-AD04AH41) converts an analog signal to a 12-bit digital signal, and then inputs the signal to a GLC unit.

The Digital/Analog Conversion Unit (FN-DA04AH41) converts the GLC unit's internally processed 12-bit digital to analog output.

This chapter explains the standard system design for the Flex Network unit, and the types of units available.

1.1 System Design

The following information explains how to connect the GLC to a Flex Network Unit. When connecting the Flex Network unit, 2 channels are available - CH1 and CH2. Each channel outputs the same data and either can be used for data transmission. The maximum number of connectable units, when using a single channel, is 31, and when using a second channel, the number increases by 32 to a total of 63.

Important

- ***Units can be connected at the above number of connectable units when one unit (16 bits) occupies a single Flex Network unit. In case of an analog unit, each AD / DA conversion unit occupies 4 units (64 bits).***
- ***The Flex Network uses high speed data transfer technology, and if a is cable used for data transfer that is not the same as that specified in this document, network data transfer performance cannot be guaranteed. Thus, be sure to use only the cable(s) recommended here.***

Reference *3.2.1 using the Flex Network Communication Cable*

■ With One (1) Channel

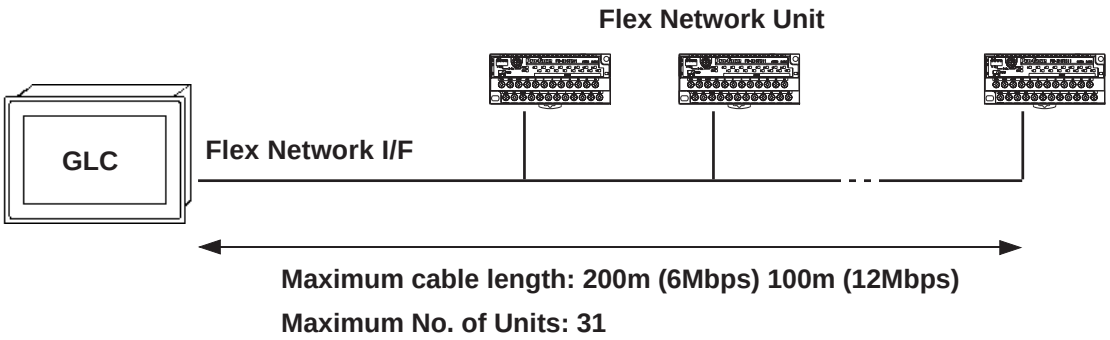

■ With Two (2) Channels

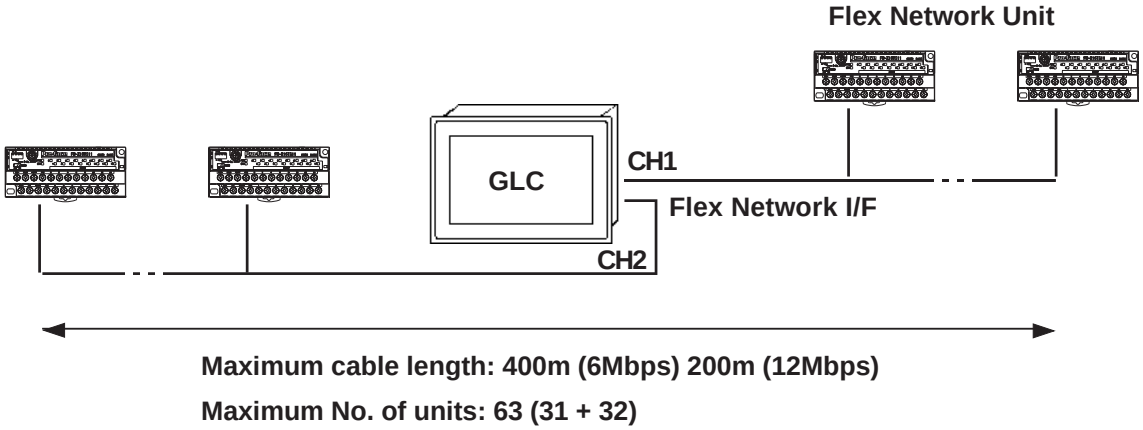

Note: When 2 channels are used, one of each channel can be connected with up to 32 units.

■ Standard System Design

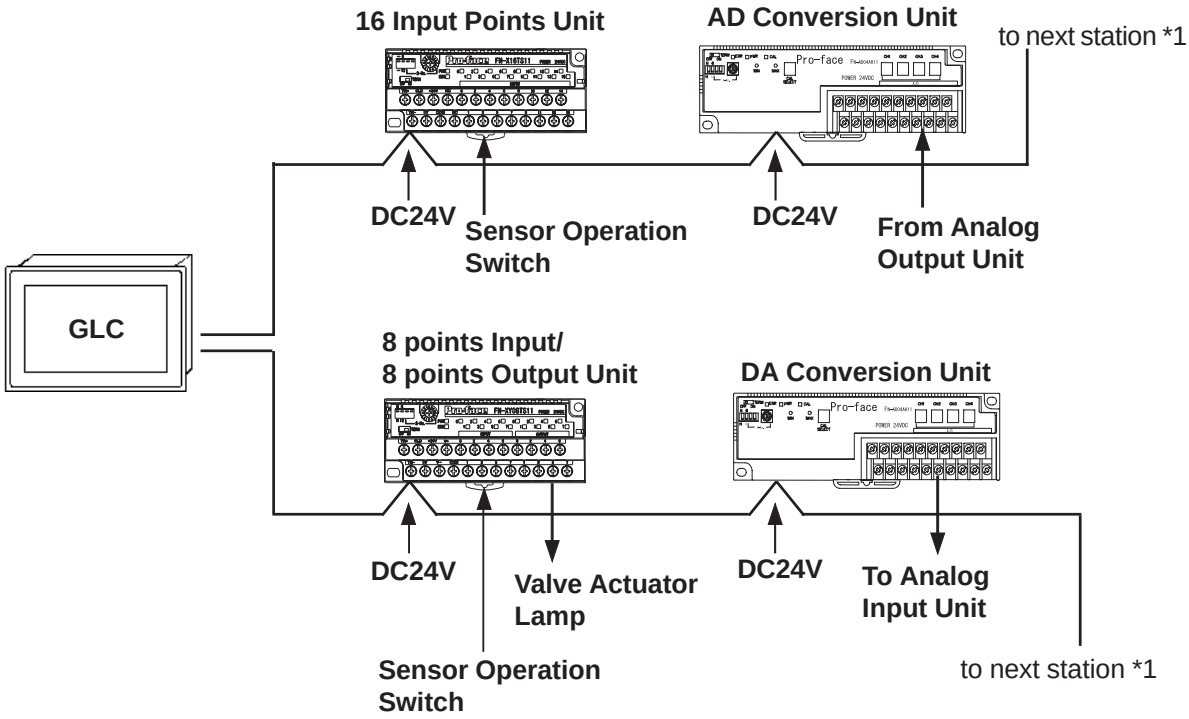

Note: • 6Mbps is the recommended speed.

**1 Be sure the Terminal Switch (TERM) of the network's last unit (at each end) is turned ON.*

1.2 Accessories

All optional equipment listed here is sold separately.

■ Optional Items

Item	Model No.	Description
Flex Network Communication Cable	FN-CABLE 2010-31-MS (10m)	Connect GLC units with Flex Network units.
	FN-CABLE 2050-31-MS (50m)	
	FN-CABLE 2200-31-MS (200m)	

Memo

1. General Specifications
2. Performance Specifications
3. Analog Characteristics
4. Analog/Digital Conversion
5. 4-Channel Analog Unit Wiring
6. Part Names and Features
7. Dimensions

Chapter 2 Specifications

2.1 General Specifications

2.1.1 Electrical

■ **Control Section**

Items	FN-AD04AH11	FN-DA04AH11
Rated Voltage	DC24V	
Input Voltage	DC20.4V to DC28.8V	
Allowable Voltage Drop	Up to 10ms (Power Supply:DC24V)	
In-Rash Current	30A or less	
Power Consumption	4.8W or less	7.2W or less
Voltage Endurace	AC1500V 10mA for 1min. (between input/output and FG terminals) AC500V 1min. (between power supply 1st Level and 2nd Level)	
Insulation Resistance	10MΩ or higher at DC500V (between charging and FG terminals)	

2.1.2 Environmental

Ambient Operating Temperature	0^oC to 55^oC
Ambient Storage Temperature	-20^oC to $+70^oC$
Ambient Humidity	30%RH to 95%RH (no condensation) level RH - 1
Atmosphere	Free of dust (less than $0.1mg/m^3$)
Corrosive Gas	No corrosive gasses
Vibration Endurance	5Hz to 55Hz 60m/s^2 (in X,Y,Z directions for 3 times each)
Noise Endurance (via noise simulator)	Noise Voltage: 1000Vp-p Pulse Width: 1ms Rise Time: 1ns
Electrostatic Discharge Immunity	Contact Discharge, (IEC61000-4-2, Level 3)

2.1.3 Structural

Attachment Method	via 35 mm DIN rail or by attachment screws
Cooling Method	Natural air circulation
Weight	Less than 350g
External Dimensions	W168 mm [6.61 in.] x H50 mm [1.97 in.] x D50 mm [1.97 in.]
Rating	IP30

2.2 Performance Specifications

2.2.1 Data Transfer Settings

	GLC2000/LT Series	GP3000 Series
Communication Type	1:N	
Connection Method	Multi Drop	
Transfer Distance	At 6Mbps 200m per CH, at 12Mbps100m per CH	
Transfer Method	During cyclic period, distributed transmission, Half-duplex	
Transfer Speed	6Mbps, 12Mbps	
Transfer I/F	Differential method, Pulse transfer resistance	
Error Check	Format check, bit check, CRC-12 check	
No. of Stations	63 (max.), 1008 I/O points (depending on type of units used.)	63 stations max., Bit variable input: 256 points, Bit variable output: 256 points, Integer variable input: 64 points, Integer variable output: 64 points (depending on type of units used.)

2.2.2 Flex Network Analog Unit Input/Ouput

■ Analog Input Section (FN-AD04AH11)

Resolution	12 bit
Number of Input Channel	4ch (fixed)
Conversion Time	up to 2 milliseconds
Input Range	0 to 5V (Impedance 1MΩ)
	1 to 5V (Impedance 1MΩ)
	0 to 10V (Impedance 1MΩ)
	-5 to 5V (Impedance 1MΩ)
	-10 to 10V (Impedance 1MΩ)
	0 to 20mA (Impedance 200Ω)
	4 to 20mA (Impedance 200Ω)
Input Range Switch	Depends on rotary switch settings
Calibration Function	OFFSET, GAIN Setting Setting the upper limit value / lower limit value for each range via switch
Accuracy	0.3% / FS (25 ^{o}C) 0.5% / FS (0°C to 25°C)
Insulation Method	Photocoupler Insulation (input terminals / between internal circuits)
Processing (after conversion)	Simple Average, Running Average Exclude Max. / Min. values
Conversion Timing	Simultaneous - all channels (not selectable)

■ Analog Output Section (FN-DA04AH11)

Resolution	12 bit
Number of Output Channel	4ch (fixed)
Conversion Time	Up to 2 milliseconds
Output Range	0V to 5V (Impedance 1KΩ)
	1V to 5V (Impedance 1KΩ)
	0V to 10V (Impedance 1KΩ)
	-5V to 5V (Impedance 1KΩ)
	-10V to 10V (Impedance 1KΩ)
	0mA to 20mA (Impedance 400Ω)
	4mA to 20mA (Impedance 400Ω)
Output Range Switch	Depends on rotary switch settings
Calibration Function	OFFSET, GAIN Setting Setting the upper limit value / lower limit value for each range via switch
Accuracy	0.3% / FS (25 ^{o}C) 0.5% / FS (0 ^{o}Cto 55 ^{o}C)
Insulation Method	Photocoupler Insulation (output terminals / between internal circuits)
Conversion Timing	Convert all channels at all time (not selectable)

2.3 Analog Characteristics

This section explains the Flex Network unit Analog Characteristics.

■ Voltage

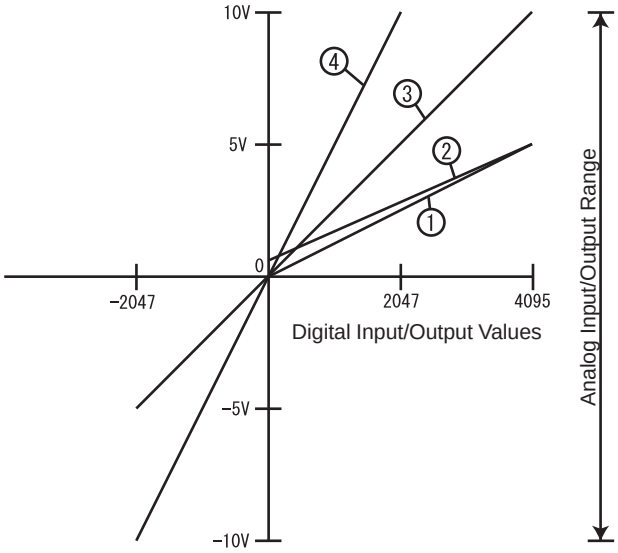

			Digital Input/Output Values			
			-2047	0	2047	4095
Voltage (V)	0V to 5V	①	-	0	2.5	5.0
	1V to 5V	②	-	1	3.0	5.0
	0V to 10V	③	-	0	5.0	10.0
	-5V to 5V		-5.0	0	5.0	-
	-10V to 10V	④	-10.0	0	10.0	-

■ Current

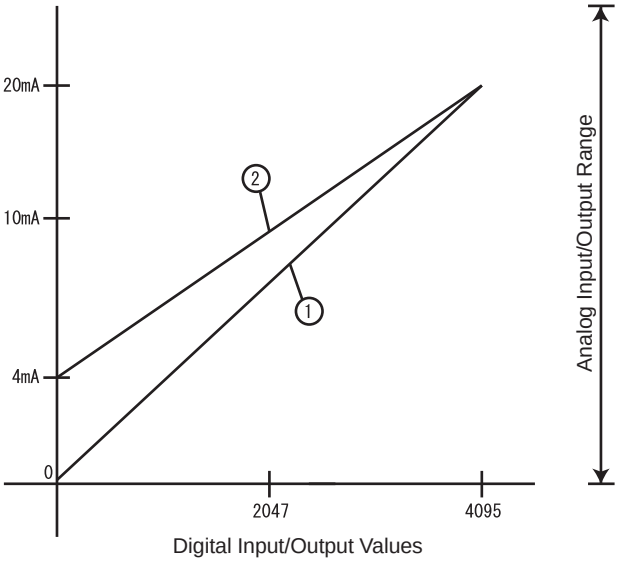

			Digital Input/Output Values		
			0	2047	4095
Current (mA)	0V to 20V	①	0	10	20
	4V to 20V	②	4	12	20

2.4 Analog/Digital Conversion

■ Simple Average

- Average is calculated based on designated number of samples.
- Each average value becomes the A/D input value.
- The data is updated at the end of each sample period.

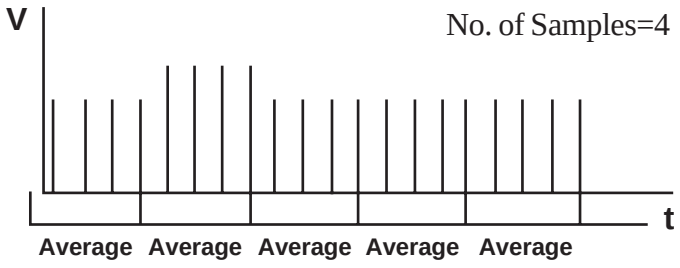

■ Sliding Average

- Average is calculated based on previously designated number of samples.
- Each average value becomes the A/D input value.
- The data is updated at the end of each sample period.

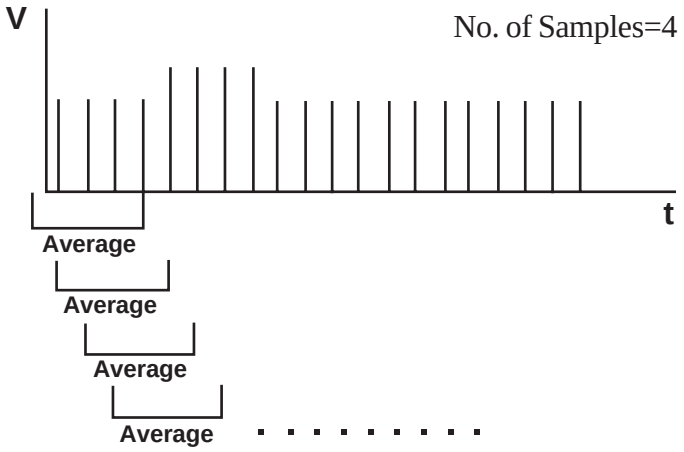

■ Omit Max./Min.

◆ Not omitted

If the “sample count” is set to 6, the result is the average of these six samples.

◆ Omitted

If the “sample count” is set to 6, the Max./Min. values are omitted, and the average value is calculated based on the remaining 4 samples.

2.5 4-Channel Analog Unit Wiring

This section explains the Flex Network unit Connection and Circuit Drawings.

Note: **If the Flex Network unit's power and output, and the sensor power seem to be receiving excessive levels of field noise, be sure to separate the power and signal lines.**

■ 4-Channel Analog/Digital Conversion Unit Wiring (FN-AD04AH11)

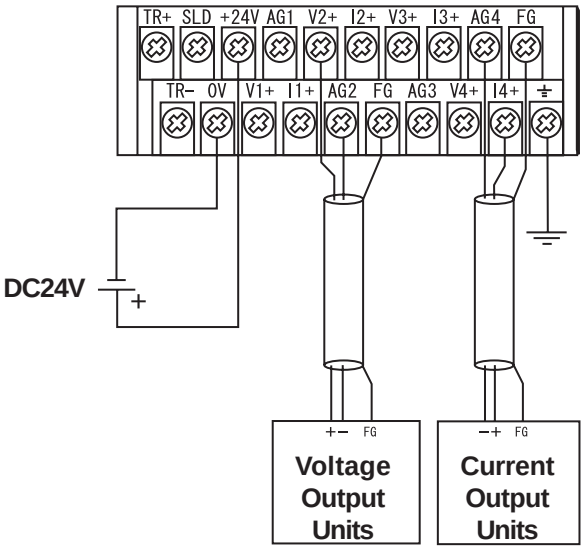

Ch 1 output voltage terminals ..... V1+, AG1, FG*1
Ch 1 output current terminals ..... I1+, AG1, FG*1

◆Input Circuit Drawing

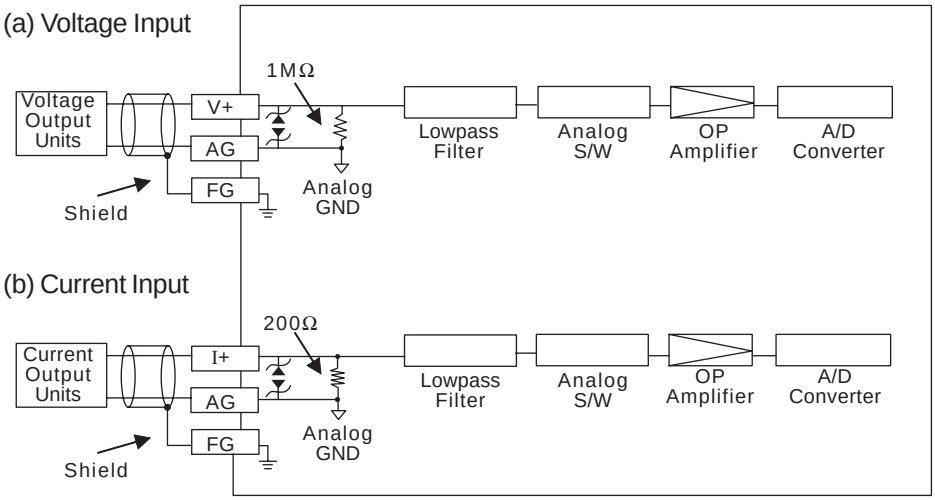

*1 *Only one FG terminal can be used when using 2 channels.*

■ 4-Channel Digital/Analog Conversion Unit Wiring (FN-DA04AH11)

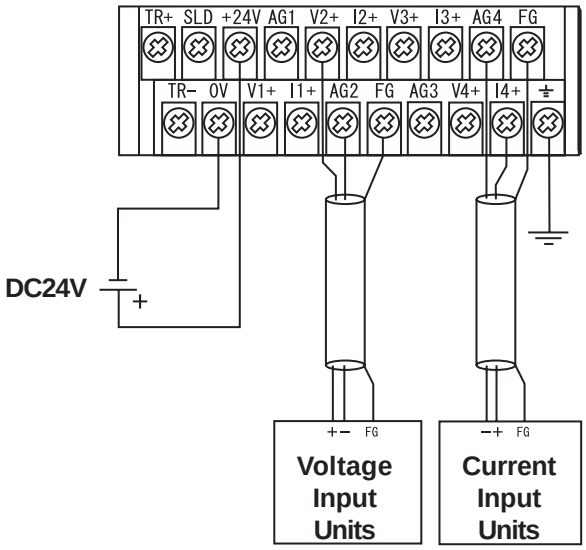

Ch 1 for output voltage terminals ..... V1+, AG1, FG*1
Ch 1 for output current terminals ..... I1+, AG1, FG*1

◆Output Circuit Drawing

(a) Voltage Output

(b) Current Output

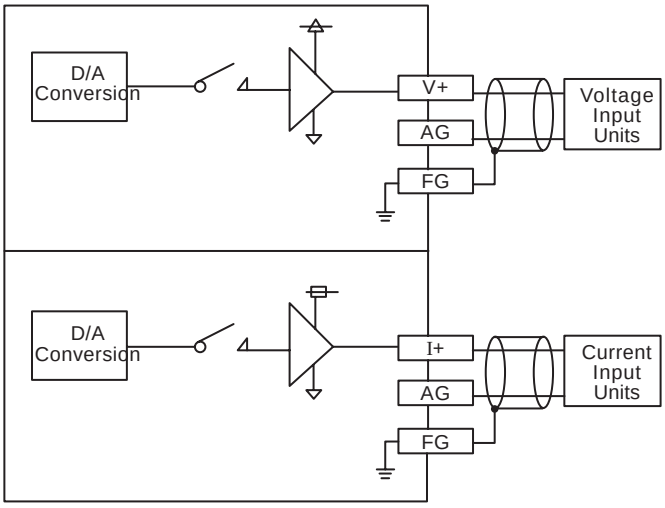

*1 Only one FG terminal can be used when using 2 channels.

2.6 Part Names and Features

2.6.1 4-Channel Analog Unit Part Names and Features

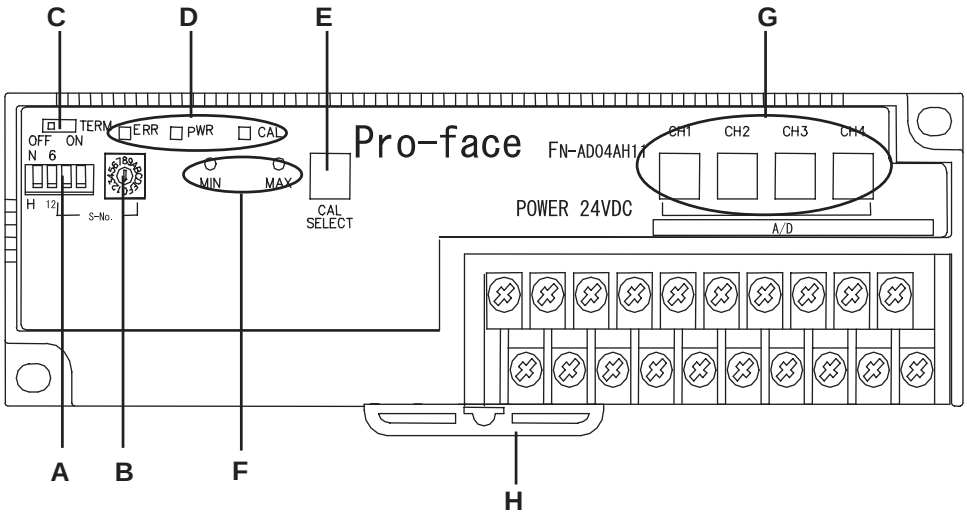

A: Dip Switches

Sets the output hold settings, transmission speed and station no. (upper 1st digit).

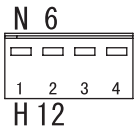

B: Station No. Switch

Uses the lower 1st digit to set the station no.

C: Terminator

Turns the termination resistance feature ON or OFF.

D: Status LED

Indicates the following conditions.

Status LED	Condition
POW (Green LED)	When unit is first turned ON.
RUN (Green LED)	Blinks when data transfer is enabled.
ERR (RED LED)	Blinks when the unit is malfunctioning.

E: Calibration Select Switch

4 Channel Analog/Digital Conversion Unit (FN-AD04AH11)

Select SW Setting	Calibration
1	CH1- AD Lower / Upper Limit Values Setting
2	CH2- AD Lower / Upper Limit Values Setting
3	CH3- AD Lower / Upper Limit Values Setting
4	CH4- AD Lower / Upper Limit Values Setting
0, 5 to F	Disabled (*1)

*1 : The factory setting is “0”.

4 Channel Digital/Analog Conversion Unit (FN-DA04AH11)

1	CH1- DA Lower / Upper Limit Values Setting
2	CH2- DA Lower / Upper Limit Values Setting
3	CH3- DA Lower / Upper Limit Values Setting
4	CH4- DA Lower / Upper Limit Values Setting
0, 5 to F	Disabled (*1)

*1 : The factory setting is “0”.

E: Calibration Perform Switch

MIN: Performs calibration of the AD or the DA's lower limit value
MAX: Performs calibration of the AD or the DA’s upper limit value

G: Range Switches

Range SW setting	Range
0	0V to 5V (*1)
1	1V to 5V
2	0V to 10V
3	-5V to 5V
4	-10V to 10V
5	0 to 20mA
6	4 to 20mAV
7 to F	Disabled

*1 : The factory setting is “0 (0 to 5V)”.

H: DIN Rail Attachment Hook

Used to attach the Flex Network unit to the DIN rail.

■ Digital/Analog Conversion Unit (FN-DA04AH11) Output Hold Settings

Dip switch No. 1 is used to turn this setting ON/OFF. The factory setting is OFF(No Hold)

◆ Output Hold ON (Hold)

When a communication error occurs, the unit will HOLD the output condition received in the previous communication cycle. When the next cycle is performed and the next command is successfully received, the output will then be changed.

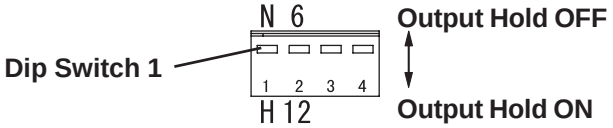

◆ Output Hold OFF (Non Hold)

When a communication error occurs, all outputs are reset to 0 (OFF). When normal communication is restored, the output is also restored.

Important

- ***When output hold is used and communication mulfunction happens, as the analog output just before the error occurs is held, be sure your system is controlled by a fail-safe system.***
- ***When the Logic Program changes from the RUN condition to either the OFFLINE mode or RESET, The GLC or the I/O signal will be performed as shown below, regardless of the Output Hold Setting. Be sure to consider this when changing to either the OFFLINE or RESET modes.***

GLC Condition	RUN	OFFLINE	RUN
Analog Output I/O Signal No Analog Output	Output from Logic Program	No Analog Output	Output from Logic Program

Please remember that the Reset mode's I/O signal OFF timing is not fixed.

■ Communication Speed Settings

Dip Switch No. 2 controls the communication speed (6Mbps or 12Mbps). The factory setting is 6Mbps and is recomended.

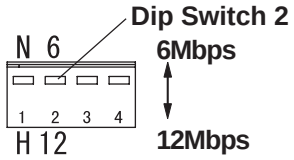

■ S-No. (Station Number) Setting

Station numbers from 1 to 63 are set in hexadecimal (01h to 3Fh) The factory setting is 0. The hex upper digit is controlled by the Dip switch 3 and 4's ON/OFF settings, and the lower digit is set via the S-No. 0 to F setting.

S-No. Setting Example

S-No.		Dip Switch		S-No. (Sta. No.)
Base 10	Base 16	3	4	Switch
1	01h	OFF	OFF	1
16	10h	OFF	ON	0
63	3Fh	ON	ON	F

■ Termination Settings

This setting helps prevent reflections (echoes) from the terminating unit. (adjusts the termination impedance)

Be sure that each channel in your system's final unit has this termination setting set to ON.

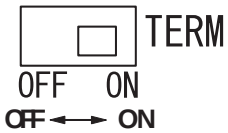

■ How to Set the Calibration Switches

To set the calibration switch to setting mode, press the CAL SELECT switch until the setting changes from (0, 9 to F) for (disabled) to the desired setting (1 to 8).

The unit can be calibrated for each channel and range, using the calibration perform switch (MIN, MAX), the calibration select switch, and the range switch. To finish calibrating, set the Calibration Select switch to the disabled position (No Operation). The calibration procedure is shown in the following pages.

◆ 4 Channel Analog/Digital Conversion Unit (FN-AD04AH11)
Analog Input Calibration Setting

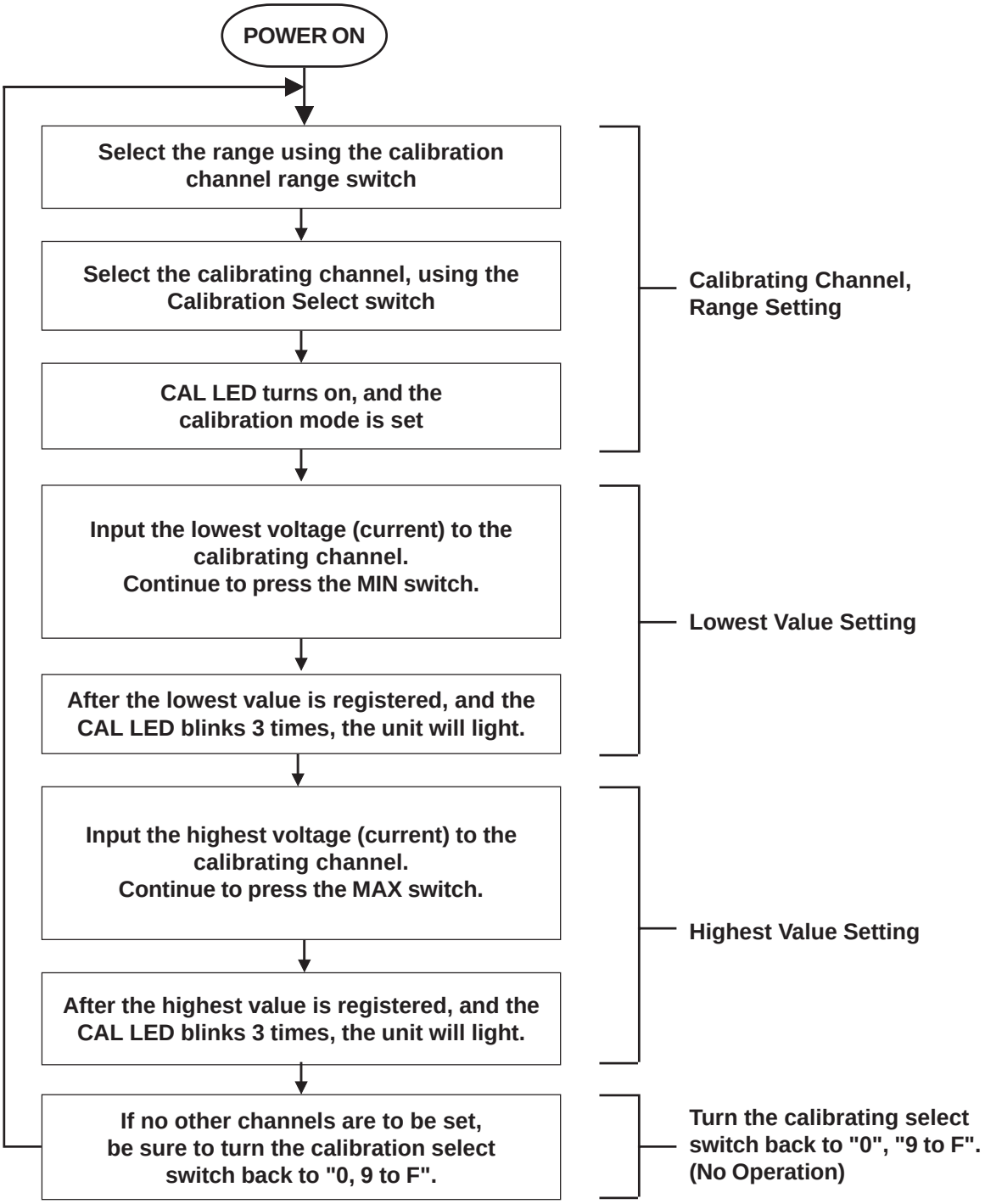

◆ 4 Channel Digital/Analog Conversion Unit (FN-DA04AH11)
Analog Output Calibration Setting

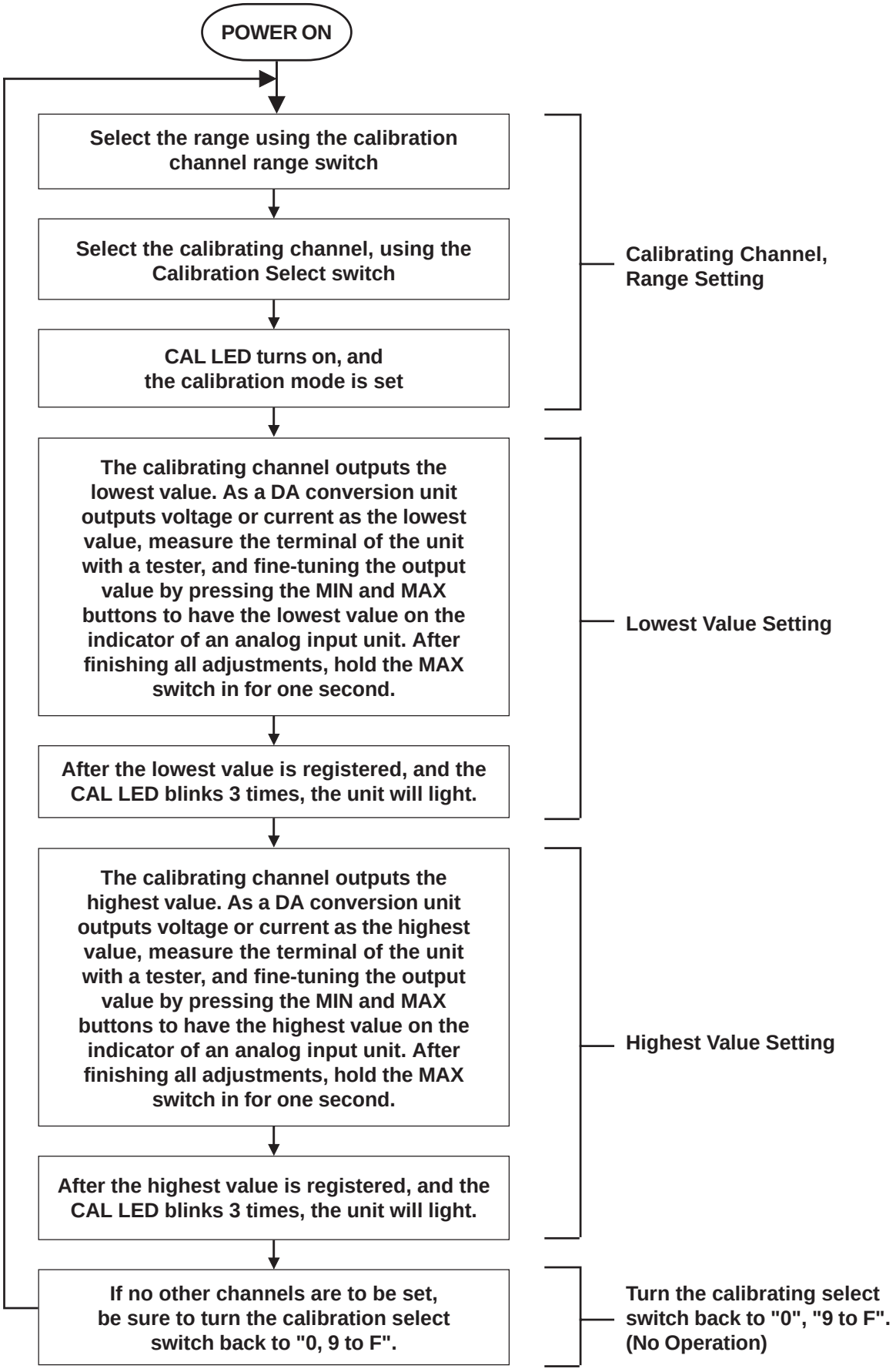

2.7 Dimensions

2.7.1 Analog Unit Dimensions

Units: mm [in.]

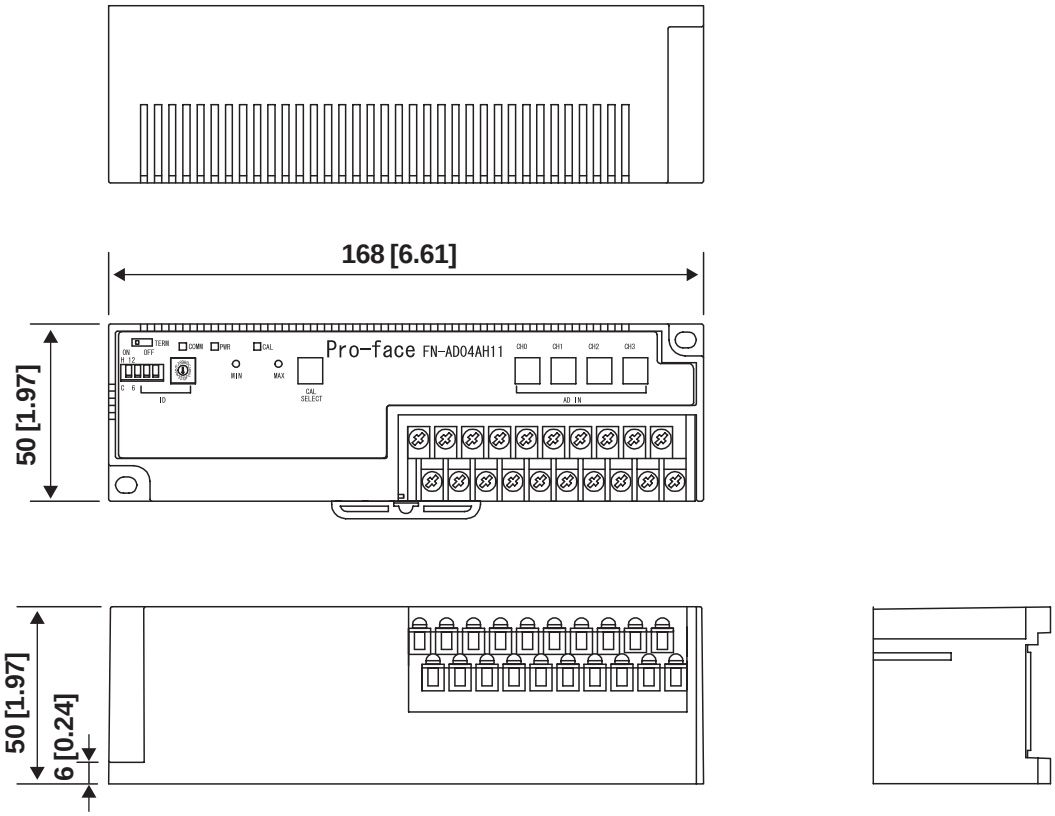

1. Installation
2. Wiring

Chapter 3 Installation and Wiring

3.1 Installation

⚠ Warning

Prior to installing the Flex Network Unit:

Be sure that the main power supply is turned completely OFF before beginning to wire the unit.

3.1.1 Installing / Removing the Analog Unit

■ Attaching the Unit to a 35mm DIN Rail

◆ Attachment

Hang the unit's top lip hook over the top of the DIN rail and tilt the unit down until it clicks into place.

◆ Removal

Use a standard screwdriver to pull the unit's attachment clip down until the bottom of the unit is freed from the rail. Tilt the unit up and remove.

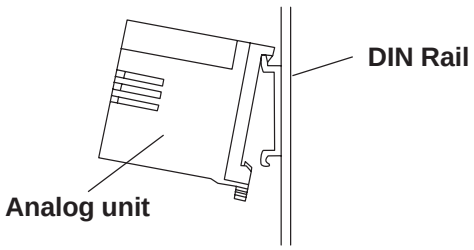

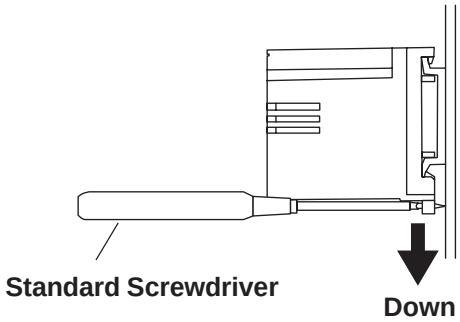

Important ***Be sure to confirm the unit's top and bottom faces before installing the unit.***

■ Installing the Unit in a Panel

Create screw holes for installing the unit using the dimensions given below. Secure the analog unit in place with M4 size screws. Screw torque should be 1.0 to 1.3 N•m.

Unit: mm [in.]

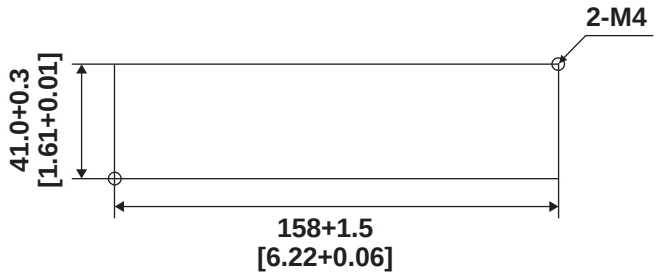

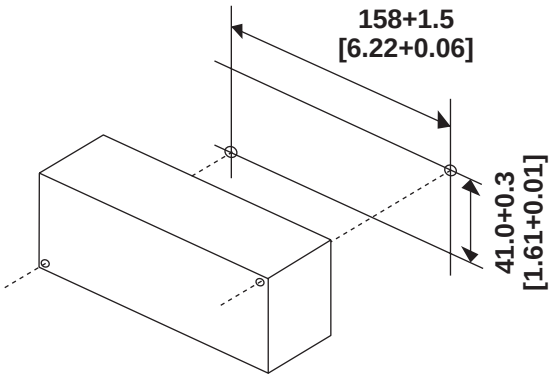

3.2 Wiring

WARNING

Prior to wiring the Flex Network Unit:

Be sure that the main power supply is turned completely OFF before beginning to wire the Unit.

3.2.1 Using the Flex Network Communication Cable

Use jumper wires between the GLC unit's Flex Network I/F and Flex Network units, as well as between each distributed Flex Network unit (T-type connections are not possible)

We suggest the following cables for your Flex Network.

Retailer	Model No.	Length
Pro-face	FN-CABLE2010-31-MS	10m
	FN-CABLE2050-31-MS	50m
	FN-CABLE2200-31-MS	200m

■ Flex Network Analog Unit Wiring

The cable should be made as shown below:

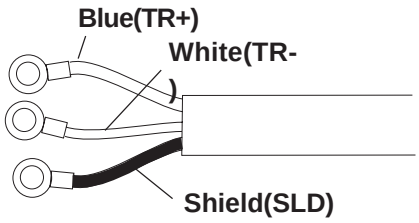

Important ***The shield line should either be taped or be covered with a plastic tube.***

Use the following type of crimp terminals.

Unit: mm [in.]

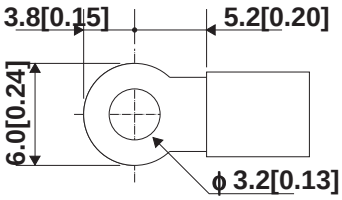

Important ***Crimp terminals should either be taped or be covered with a plastic tube.***

Note: • **The required torque for securing ring terminals is 0.6 to 1.0 n•m/2**

■ Flex Network I/F Wiring

Remove the wire's external covering and insert the wire center strand into the opening.

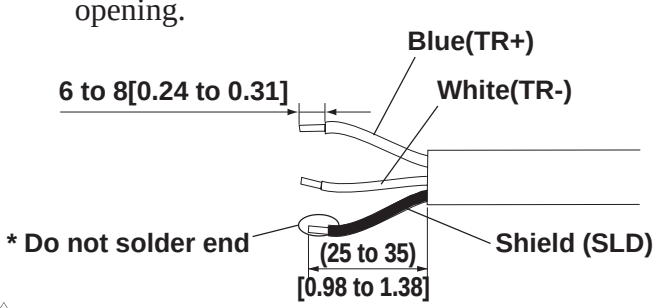

Important
- ***Be sure to tape or put a plastic tube over the shield line.***
- ***Do not solder the wire itself. This could lead to a bad or poor contact.***

◆ Connecting the Flex Network Cable to a GLC2400/GLC2500/GLC2600 Series Unit

Screwlock Terminal Block (shown in the following table's bold rectangle (No. 3 to 8).

Pin Assignments	Pin No.	Signal	Meaning	
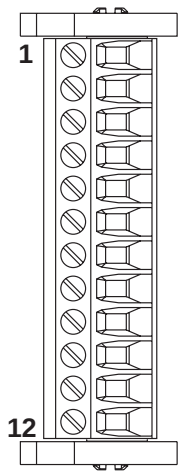	1	AUXCOM	External Reset Common	External Reset
	2	AUXRESET	External Reset Input	
	3	TR+	CH1 Communication Data	Flex Network Communication
	4	TR -	CH1 Communication Data	
	5	SLD	CH1 Cable/Shielded Line	
	6	TR+	CH2 Communication Data	
	7	TR -	CH2 Communication Data	
	8	SLD	CH2 Cable/Shielded Line	
	9	RESERVE	Reserve	-
	10	SP OUT	Speaker Output	Sound Output
	11	GND	Ground	
	12	LINE OUT	Sound Output	

Applicable Connector : BL3.5/12LH <made by Weidmuller Japan>

◆ Connecting the Flex Network Cable to a GLC2300/LT/GP3000 Series Unit

Screwlock Terminal Block

Pin No.	Signal	Meaning	Pin Arrangement		
			GLC2300 Series	LT Series	GP3000 Series
1	TR+	CH1 Communication Data	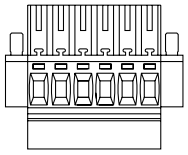	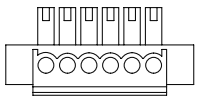	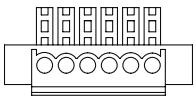
2	TR -	CH1 Communication Data			
3	SLD	CH1 Cable/Shielded Line			
4	TR+	CH2 Communication Data			
5	TR -	CH2 Communication Data			
6	SLD	CH2 Cable/Shielded Line			

Applicable Connector
GLC2300 Series :BL3.5/6/90F <made by Weidmuller>
LT Series :MC1,5/6-STF-3,81 <made by Phoenix Contact>
GP3000 Series : 284510-6 <made by Tyco Electronics AMP.>

Note:

- **Use a small sized screwdriver to tighten the set screws.**
- **If the central wire's end (individual) wires are not twisted correctly, the end wires may either short against each other, or against an electrode. For use of pin terminal, refer to the recommended pin terminal shown in the table below.**

Model	Recommended Pin Terminal
GLC2000 Series	H0.5/6, H0.75/6, H1/6 <made by Weidmuller Japan>
LT Series	AI0.5-6WH, AI0.3-6TQ <made by Phoenix Contact>
GP3000 Series	*-966 067-* compatible <made by Tyco Electronics AMP.> Select the one adaptable to AWG28 - 16.

■ Flex Network System Wiring Layout

The following drawing shows the wiring layout used for wires from the Flex Network
I/F connector.

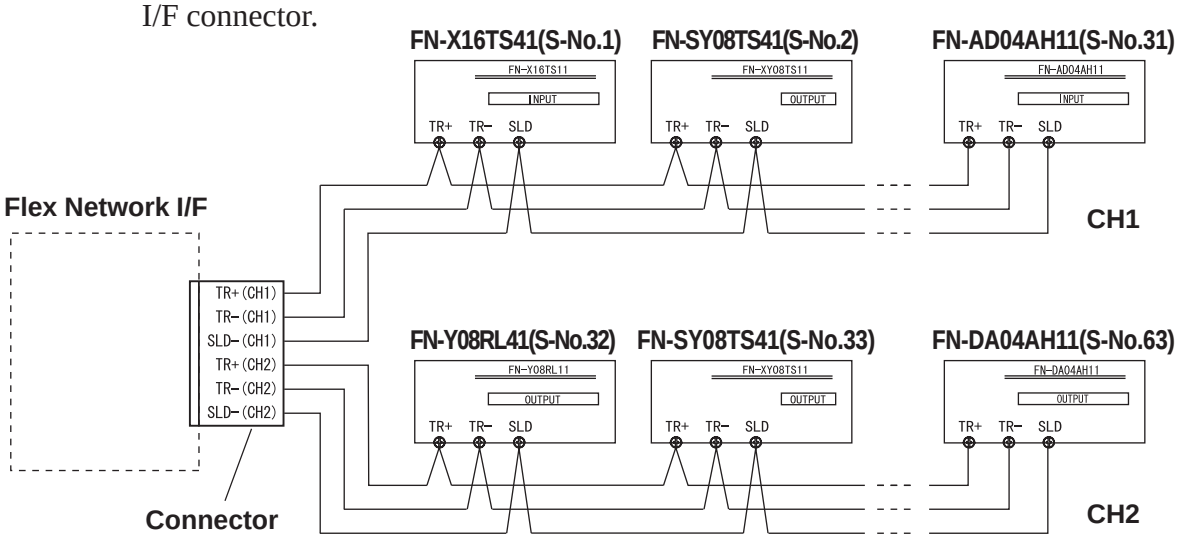

3.2.2 Power Cord Wiring

⚠ WARNINGS

- **Be sure that the main power supply is turned completely OFF before beginning to wire the unit's power cord.**
- **The Flex Network unit uses only DC24V power. Using either the incorrect voltage or AC power could result in damage to both the power supply and the unit.**
- **Since this unit has no OFF/ON switch, be sure to install a breaker type device to switch power ON or OFF.**

- Wherever possible, use thick lines (max. 1.25mm^2(0.05in^2) and be sure to twist the wire ends to reduce noise.
- Use the same type of crimp terminals as used for the Flex Network Communication Cable. Reference *3.2.1 Using the Flex Network Communication Cable*

3.2.3 I/O Cable

- Be sure to use a cable that is 0.75 to 1.25mm^2[0.03 to 0.05in^2].
- Use the same type of crimp terminals as used for the Flex Network Communication Cable. Reference *3.2.1 Using the Flex Network Communication Cable*

Important ***Confirm that all Flex Network unit terminal screws are securely tightened, even they are not used.***

3.2.4 Cautions When Wiring Communication Lines

Separating all communication lines from power lines by placing them in a separate duct will help to prevent problems from noise and interference.

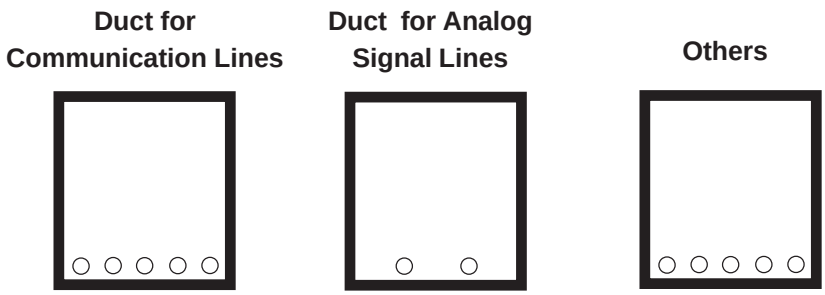

If the wires must be placed in the same duct, separate them via an earthed/grounded divider.

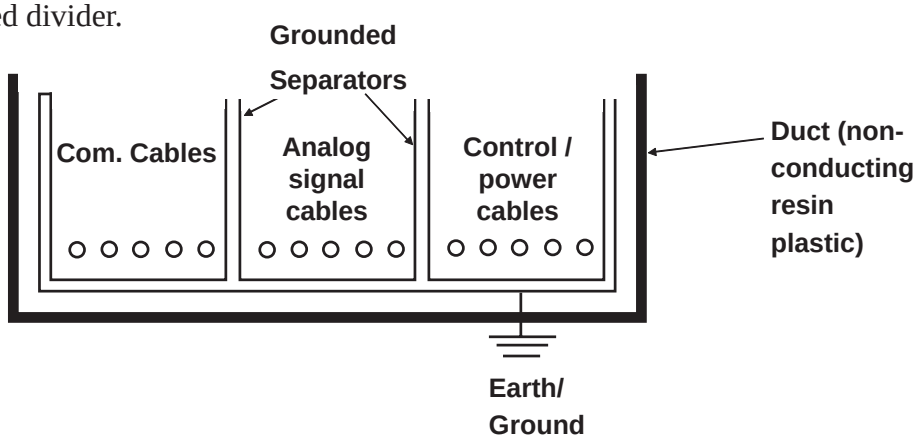

Note: **When you are unable to separate the cables as shown above, be sure to use shielded cable and create a ground from the shield line.**

Important

- ***To create a highly reliable system, be sure to use external wiring that is not easily influenced by noise.***
- ***To avoid power surges or conductive noise, use a separate duct for each cable, DC input / output wiring or AC circuit wiring, and an analog input / output cable.***
- ***To avoid mulfunctions caused by noise, be sure to use a separate ducts. Do not place or wire analog input / output lines near high frequency or power lines, such as high voltage wires, high current wire and an inverters. Also do not bundle analog input / output wiring with high frequency or power lines.***
- ***The analog input / output wire is double core shielded, however, be sure that the shielded wire is connected to an FG.***

Memo

Chapter 4

1. Prior to Troubleshooting
2. Error Code Display
3. Troubleshooting for GLC2000/LT Series
4. Troubleshooting for GP3000 Series

Problems and Solutions

This section describes the Flex Network system's error messages and countermeasures.

4.1 Prior to Troubleshooting

Prior to locating a unit problem's cause via this chapter's section ***Troubleshooting***, be sure to identify the the problem type and other basic items.

To help you with this, the Flex Network errors are classified into the following three types:

(1) Logic Program Error

• The logic program does not run (GLC status LED: Green is not lit).

(2) Flex Network I/F Error

• Communication cannot be performed with any Flex Network units.

(3) Flex Network Unit Error

• Signal input or output cannot be performed for a Flex Network unit's points (all or some).

■ Check Items

After finishing your preliminary check, be sure to also check the following items before starting troubleshooting to locate the cause(s) of the problem.

- Is the correct power voltage being supplied to the GLC and Flex Network units?
- Is the power supplied to the GLC and Flex Network unit(s) within the allowable voltage range?
- Are all connected cable wiring and connections (communication cable, I/O cable) secure and correct?
- Is any Flex Network unit terminals loose or disconnected?
- Are all Flex Network unit switches (S-No. switch, dip switch, terminal switch) set correctly?
- Is the designated communication cable being used?

4.2 Error Code Display

By displaying an error code on the GLC screen with using the system variables that indicate the I/O driver error codes, troubleshooting can be performed quickly.

Model	System Variable
GLC2000/LT Series	#IOStatus
GP3000 Series	#L_IOStatus

Note: **For GP3000 series, an error code is displayed in the system window on the GP screen without using the system variables.**

The following is an example of an error code display application.

■ Example Application

1. Create an I/O System Diagnosis button.
2. Create a ladder logic program that displays the system status as an error code when the [System Diagnosis] button is pressed.

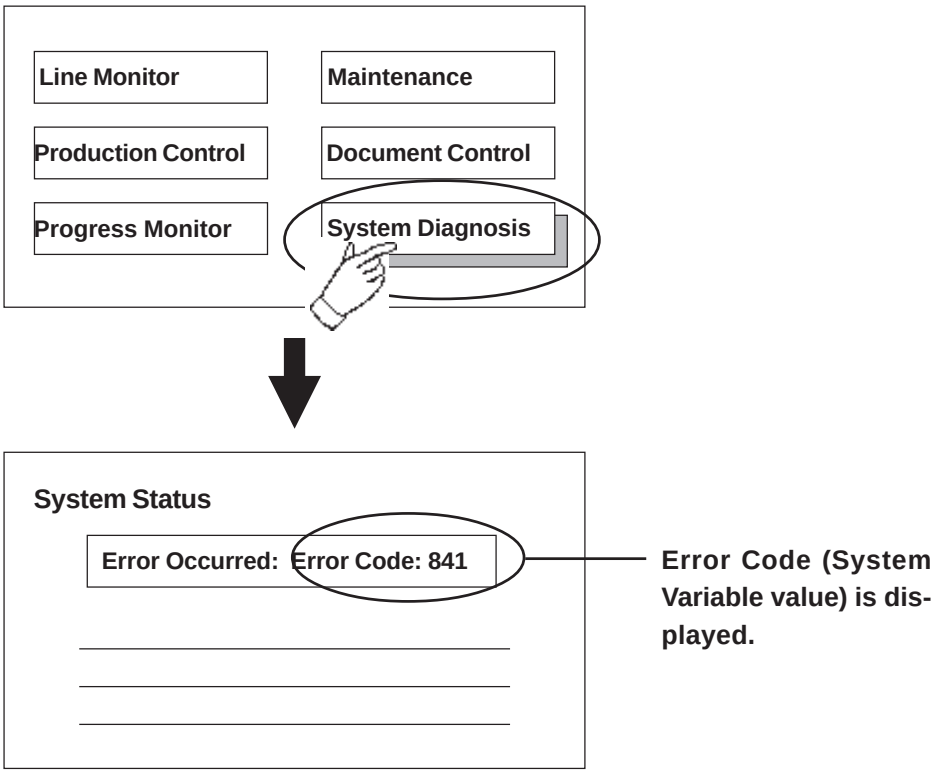

4.3 Troubleshooting for GLC2000/LT Series

4.3.1 Troubleshooting Checklist for GLC2000/LT Series

Condition	Check Item	Solution
Analog unit is not receiving power (PWR-LED is not lit)	Are the unit's DC24V power lines securely connected?	Connect the wires securely.
	Is the unit's DC24V power supply providing the correct voltage?	Check on the actual voltage level being supplied.
Analog unit is not operating correctly (ERR-LED is lit)	Is the unit's communication wires securely connected?	Connect the wires securely.
	Is the Termination Resistance switch set to ON for the units on either end of the network?	Turn each unit's Termination Resistance switch ON.
	Is the unit's Station No. set up correctly? (I.e. not duplicated?)	Set the unit's dip switch correctly.
No output from the Analog unit, or the output voltage (current) is incorrect.	Is the load side's power voltage correct?	Supply DC24V power to the unit.
	Is the unit's Station No. set up correctly? (I.e. not duplicated?)	Set the unit's dip switch correctly.
	Has calibration been correctly performed?	Perform calibration set up. (Refer to Calibration Setting section)
	Is the calibration setting switch set to 1 to 9?	After calibrating the unit, be sure to set the setting switch to 0, or 9 to F.
	Is the unit's range change rotary switch set correctly?	Set the range for each channel.
Analog input data is not converted, or input voltage value is not correct.	Is the load side's power voltage correct?	Supply DC24V power to the unit.
	Are the input line(s) set up correctly?	Set up the input line(s) according to the Input Circuit drawing.
	Has calibration been correctly performed?	Perform calibration set up. (Refer to Calibration Setting section)
	Is the calibration setting switch set to 1 to 8?	After calibrating the unit, be sure to set the setting switch to 0, or 9 to F.
	Is the unit's range change rotary switch set correctly?	Set the range for each channel.

4.3.2 Error Code List for GLC2000/LT Series

■ System Design Errors

Error Code	Definition
501	Internal variable mapped to I/O terminal.
502	Input variable mapped to output terminal.
503	Output variable allocated to input terminal
504	Discrete variable mapped to integer terminal.
505	Integer variable mapped to discrete terminal
506	Variable type not supported by driver.
507	Variable is not mapped to terminal.
801	Duplicate terminal number encountered.
802	Duplicate S-No.
803	S-No. exceeded the range.
804	Analog unit S-No. is duplicated
805	FN-HC unit S-No. is duplicated
806	FN-PC unit S-No. is duplicated

■ Initialization Errors

Error Code	Definition
821	There is no hardware unit, or the unit type is incorrect.
822	Initial error
823	Analog unit setting error

■ Runtime Errors

Error Code	Definition
841	Error (disconnection, malfunction) among connected I/O units.
842	Error (disconnection, malfunction) in analog input unit. (Input range: set at 4 - 20mA)
843	FN-HC unit error occurred. For details, use a command to call up the unit's error code. Reference *Flex Network High Speed Counter Unit User Manual*
844	Initial error in the FN-HC Unit
845	FN-HC unit Write Command error
846	FN-PC unit error. For details, use a command to call up the unit's error code. Reference *Flex Network Single-Axis Positioning Unit User Manual*
847	FN-PC unit Write Command error

■ Internal Error

Error Code	Definition
850 -	Driver error #850. Please contact your local distributor.

4.4 Troubleshooting for GP3000 Series

4.4.1 Troubleshooting Checklist for GP3000 Series

Condition	Check Item	Solution
Analog unit is not receiving power (PWR-LED is not lit)	Are the unit's DC24V power lines securely connected?	Connect the wires securely.
	Is the unit's DC24V power supply providing the correct voltage?	Check on the actual voltage level being supplied.
Analog unit is not operating correctly (ERR-LED is lit)	Is the unit's communication wires securely connected?	Connect the wires securely.
	Is the Termination Resistance switch set to ON for the units on either end of the network?	Turn each unit's Termination Resistance switch ON.
	Is the unit's Station No. set up correctly? (I.e. not duplicated?)	Set the unit's dip switch correctly.
No output from the Analog unit, or the output voltage (current) is incorrect.	Is the load side's power voltage correct?	Supply DC24V power to the unit.
	Is the unit's Station No. set up correctly? (I.e. not duplicated?)	Set the unit's dip switch correctly.
	Has calibration been correctly performed?	Perform calibration set up. (Refer to Calibration Setting section)
	Is the calibration setting switch set to 1 to 9?	After calibrating the unit, be sure to set the setting switch to 0, or 9 to F.
	Is the unit's range change rotary switch set correctly?	Set the range for each channel.
Analog input data is not converted, or input voltage value is not correct.	Is the load side's power voltage correct?	Supply DC24V power to the unit.
	Are the input line(s) set up correctly?	Set up the input line(s) according to the Input Circuit drawing.
	Has calibration been correctly performed?	Perform calibration set up. (Refer to Calibration Setting section)
	Is the calibration setting switch set to 1 to 8?	After calibrating the unit, be sure to set the setting switch to 0, or 9 to F.
	Is the unit's range change rotary switch set correctly?	Set the range for each channel.

4.4.2 Error Code List for GP3000 Series

Note: **In the system window on the GP screen, an error code is displayed with RGE* put to the top of the error code.**
Ex.) RGE*001 Not supported unit

■ System Design Errors

Error Code	Error Message	Definition
001	Not supported unit.	The type of the unit is different.
002	Illegal Parameter.	The data type of the symbol variable assigned to the Flex Network unit is illegal. The Flex Network unit setting value is illegal.
003	Device offset beyond limit.	The address of the symbol variable assigned to the Flex Network unit is out of range.
004	Terminal config overlapped.	The number of Flex Network unit terminals exceeds the limit.
005	Illegal terminal sequence.	The I/O terminal numbers are not specified in ascending order.
006	Insufficient terminals.	The number of I/O terminals is not appropriate (insufficient).
007	Units config overlapped.	Flex Network unit S-No. is duplicated and set.
008	Units count over limit.	The maximum number of connected Flex Network units (63 units) is exceeded. The maximum value of S-No. (S-No. 63) is exceeded. S-No. of the Flex Network unit that occupies more than one node has exceeded the max. (S-No. 63).
009	Drivers config overlapped.	The driver has been registered twice.
010	Unmatched In/Out terminal.	The input/output settings of the Flex Network unit are not correct.
011	Unmatched bit/word term.	The variable type specified in the Flex Network unit is incorrect.
012	Illegal level nunber.	Something is wrong with the I/O driver.
013	Illegal data addr. Gotten.	The I/O driver information is incorrect. The controller information is incorrect.
014	No drivers/units registed.	The I/O driver or Flex Network unit is not registered.

■ Runtime Errors

Error Code	Error Message	Definition
100	Unit communication error.	A communication error has occurred between the main unit and the Flex Network unit. The communication cable is cut off. The Flex Network unit is not connected. The editor settings have problems.
101	4ch. analog setting error.	Communication with the 4ch. analog unit has failed.
102	2ch. analog setting error.	Communication with the 2ch. analog unit has failed.
103	Analog unit's wire broken.	The 4 to 20mA-ranging input signal of the 4ch. or 2ch. analog unit is cut off.
104	Counter unit's error.	An error has occurred in the high-speed counter unit. For details, use a command to call up the unit's error code. Reference *Flex Network High Speed Counter Unit User Manual*
105	Counter initial error.	Initializing the high-speed counter unit has failed.
106	Counter communication err.	A communication error with the high-speed counter unit has occurred. The communication cable is cut off. The high-speed counter unit is not connected. The editor settings have problems.
107	Positioning Unit's error.	An error has occurred in the positioning unit. For details, use a command to call up the unit's error code. Reference *Flex Network Single-Axis Positioning Unit User Manual*
108	2ch. analog comm. error.	A communication error with the positioning unit has occurred. The communication cable is cut off. The positioning unit is not connected. The editor settings have problems.
109	2ch. analog comm. error.	A communication error with the 2ch. analog unit has occurred. The communication cable is cut off. The 2ch. analog unit is not connected. The editor settings have problems.

■ Internal Error

Error Code	Error Message	Definition
200	SetValue func.(INT) NG.	Integer-type Terminal data of the Flex Network unit could not be read.
201	SetValue func.(bit) NG.	Bit-type Terminal data could not be read.
202	GetValue func.(INT) NG.	Integer-type Terminal data could not be written.
203	GetValue func.(bit) NG.	Bit-type Terminal data could not be written.

Memo